Staff Report

Major Subdivision B

Case #: SUB-2018-07-00086

Attachments:

Staff Report, Final Plat & Construction Plans, Approval Letters, Photos, Application, Zoning Map, Aerial Map

Planning Commission Public Hearing: Thursday, August 2, 2018
City Council: Tuesday August 14, 2018

City Council Request

2) A resolution to approve preliminary subdivision request by RED LLC for Cypress Crossing in accordance with preliminary plat and construction plans by Wm. J. Bodin Jr. dated 8/2/2018 (Case#SUB-2018-07-00086) Approved with condition by the Planning Commission
Condition: 1) Infrastructure must be completed within 1 year in accordance with UDC

Site Information:

Location (Address): 520 S Cypress St

Council District: City Council District 2

Existing Zoning: RM-2

Future Land Use: Low Density Residential

Existing Land Use: Undeveloped

Site Description:

Approx 3.5 acres of undeveloped land. Previously proposed as a residential subdivision that was never comopleted. Fronting on railroad right of way and a portion of E. Park Ave that was never improved.

Adjacent Land Use and Zoning:

Direction:	Land Use/Zoning:
North	Single Family & Undeveloped/RM-2
South	Single Family & Undeveloped/RM-2
West	Railroad Right of Way
East	Single Family/RM-2

Additional Information:

2/7/2002-Planning Commission voted unanimously to approve final subdivision for Cypress Village a single family and duplex subdivision.
2/19/2002-City Council approved by Resolution to approve Cypress Village Subdivision.
Lots 1-5 where constructed as single family homes (fronting on S. Cypress St), but the extension and improvements for E. Park and Village Court (50' ROW) was never constructed. This area was foreclosed on by the bank.
4/7/2016 - Planning Commission approved the Major Site Plan for Cypress Crossing.

Findings:

Will this diminish the value of the surrounding properties?	No
Will this alter the essential character of the neighborhood?	No
Will granting this request be detrimental to the public welfare?	No
Light and air?	No
Traffic congestion of hazard?	No
Overburden existing drainage and utilities?	No
Emissions of odors, fumes, gasses, dust, smoke?	No
Noise and vibrations?	No

Public Hearing:

For: Bill Bodin (engineer)

Against: NONE

Commission Recommendation:

Motion: To approve with condition

For: Jimmy Meyer, Jefferey Smith, Matt Sandifer, Stanley Young

Against: NONE

Abstain: NONE

Absent: William Travis

FINAL PLANS FOR:

CYPRESS CROSSINGS SUBDIVISION

704 SOUTH CYPRESS STREET
HAMMOND, LA. 70403

PREPARED FOR:

RED, LLC.

202 E. ROBERT STREET
HAMMOND, LA. 70401

AUGUST 1ST, 2018

VICINITY
SCALE 1"=500'

INDEX OF SHEETS

1	TITLE SHEET
2	FINAL PLAT
3	SITE PLAN
4	TOPOGRAPHY
5	WATER & SEWER LAYOUT
6	DRAINAGE LAYOUT
7	PROFILES
8	WATER & SEWER DETAIL SHEET
9	RUNOFF PATTERNS & CALCULATIONS
10	LANDSCAPE PLANS
11-EC1	EROSION CONTROL DETAILS
12-EC2	EROSION CONTROL DETAILS
13-EC3	EROSION CONTROL DETAILS
14	GENERAL NOTES

BODIN & WEBB, INC.
CONSULTING ENGINEERS
AND LAND SURVEYORS

PROJECT NO. 1633

STATE OF LOUISIANA
WILLIAM J. BODIN JR.
REG. No. 8193
REGISTERED
PROFESSIONAL ENGINEER
IN
CIVIL ENGINEERING

WILLIAM J. BODIN, JR. C.E., P.L.S.
LA. REG. NO. 8193 & 4253

08-02-18
DATE

S:\CAD Jobs\JOBS BY YEAR\2015\15321\10-4-16\CYPRESS CROSSING 10-4-2016\cypress crossings temp recover 08-02-18.dwg, 8/2/2018 1:47:43 PM, AutoCAD PDF (General Documentation).pc3

CYPRESS CROSSING SUBDIVISION

RESUBDIVISION OF LOTS 8–15 OF CYPRESS VILLAGE SUBDIVISION, UNIMPROVED VILLAGE COURT RIGHT OF WAY, AND REVOCATION OF MOST WESTERLY PORTION OF UNIMPROVED E. PARK AVE. (60' x 92.50') INTO CYPRESS CROSSING SUBDIVISION LOTS 1–15, G1, AND G2

NAME OF SUBDIVISION CYPRESS CROSSINGS SUBDIVISION

NAME OF DEVELOPER RED, LLC.

ADDRESS OF DEVELOPER 202 E. ROBERT STREET
HAMMOND, LA 70403

DESIGN ENGINEERS CERTIFICATION AND SEAL
I hearby certify this legal description is true and correct and the plat is in accordance with the provisions of the Louisiana Revised Status.

Signature _____ Date _____

PLANNING COMMISSION REVIEW PRELIMINARY & FINAL DEVELOPMENT WITH
PROCEDURE "A" (WITH BOND) ___PROCEDURE "B" (WITHOUT BOND)
PRELIMINARY REVIEW APPROVAL DATE _____
PROOF OF BOND: AGENT _____ AMOUNT $ _____
FINAL APPROVAL (OFFICIAL SUBMITTAL DATE) _____
SIGNATURE OF APPROVAL OF FINAL PLANS BY COMMISSION CHIARMAN
_____ DATE _____

ACCEPTANCE OF PLANNING COMMISSION APPROVAL OF FINAL PLANS (NOT DEDICATION OF IMPROVEMENTS)

OWNER/DEVELOPER _____ DATE _____

DESIGN ENGINEER _____ DATE _____

BOND ACCEPTANCE _____ DATE _____

CITY COUNCIL PRESIDENT _____ DATE _____

OFFER OF DEDICATION BY OWNER/DEVELOPER
I hereby offer for dedication to the City of Hammond use of roads, easements, parks and required utilities as shown on this subdivision plat, and construction plans, specifications and restrictions as approved on _____(date) by the Hammond Planning
Cypress Crossings Subdivision
(name of subdivision)

Owner/developer _____ DATE _____
_____ DATE _____
_____ DATE _____
_____ DATE _____

ACCEPTANCE BY THE CITY OF OFFER TO DEDICATE
The City of Hammond hereby accepts the dedication of roads, easments, parks and required utilities in Cypress Crossings subdivision. This acceptance is subject to final acceptance of construction by the City and posting of the required one year maintenance bond, if any, by the

ACCEPTANCE (signature where applicable)

CITY COUNCIL PRESIDENT _____ DATE _____

RECORDED BY _____ DATE _____

NOTES:
1. FLOOD ZONE "X" (NOT FLOOD PRONE)
   FLOOD ZONE "A" (FLOOD PRONE)
   MAP NO. 22105C0430–F
   DATED 7–22–10
2. ZONING: PRESENT ZONING IS RM–2. NO CHANGES REQUESTED.
3. NUMBER OF LOTS 15
   TOTAL ACRES: 2.54 ACRES
4. MINIMUM FRONT BUILDING SETBACK IS 20 FEET.
5. MINIMUM SIDE YARD SET BACK IS 5 FEET.
6. MINIMUM SIDE YARD SET BACK ON STREET CORNERS SHALL BE 10 FEET.
7. MINIMUM REAR YARD SET BACK IS 10 FEET.
8. A BACK–FLOW PREVENTER THAT MEET CITY OF HAMMOND SPECIFICATIONS IS REQUIRED AT ALL WATER SERVICES ON CUSTOMER SIDE OF WATER METER.

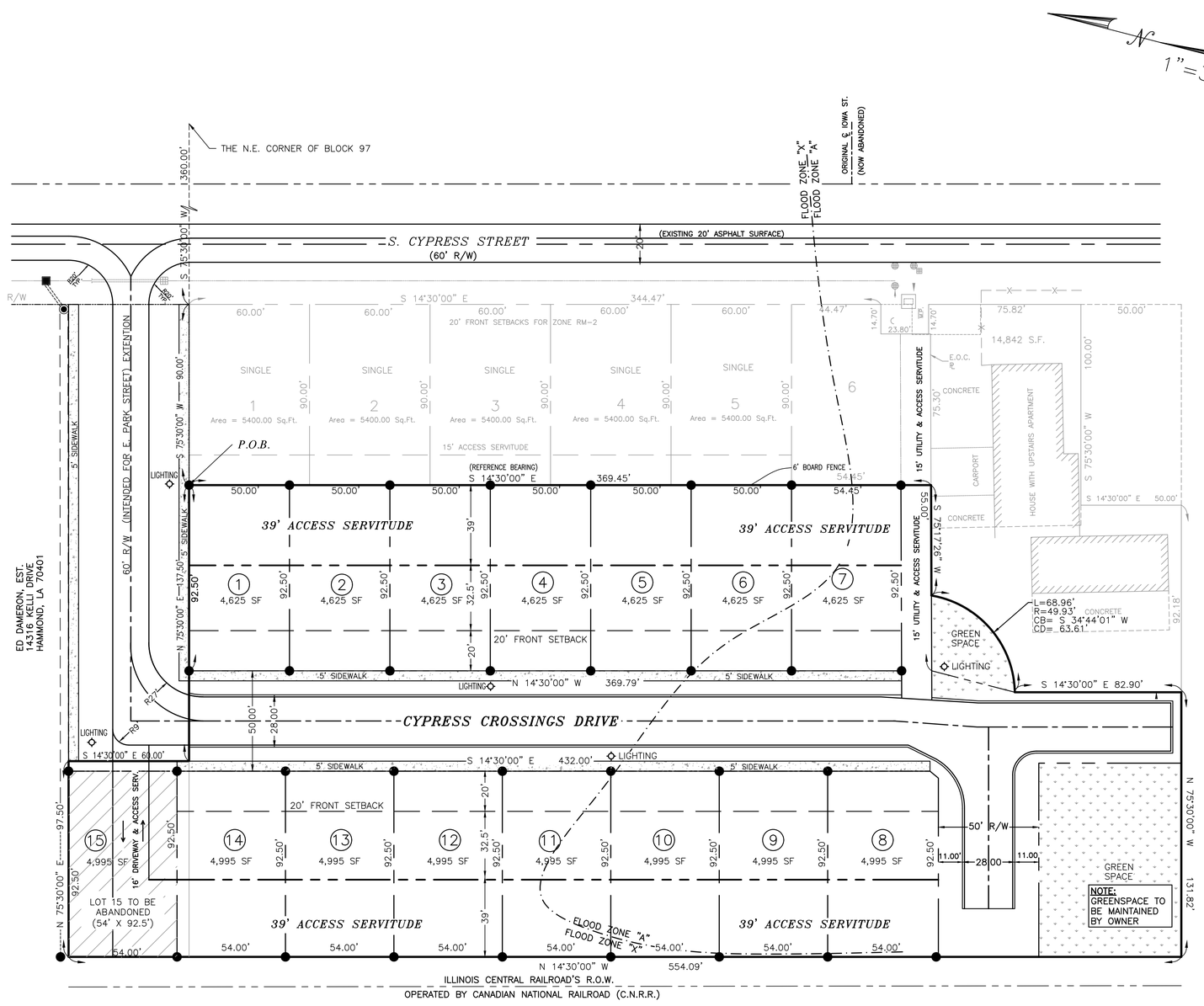

DESCRIPTION OF PROPERTY
A 2.528 ACRE PARCEL OF LAND LOCATED IN BLOCK 97, OF THE HYER SURVEY TO THE CITY OF HAMMOND, SECTION 25, T6S–R7E, MORE PARTICULARLY DESCRIBED AS FOLLOWS, BEGINNING AT A POINT 360.00' S 75°30' 00" W OF THE N.E. CORNER OF BLOCK 97 OF THE HYER SURVEY TO THE CITY OF HAMMOND TO THE INTERSECTION OF THE SOUTH R.O.W. OF E. PARK STREET AND THE EAST R.O.W. OF S. CYPRESS STREET
THENCE PROCEED 90.00' S 75°30' 00" W
TO THE POINT OF BEGINNING;
THENCE S 14°30'00" E A DISTANCE OF 369.45 FEET;
THENCE S 75°17'26" W A DISTANCE OF 55.00 FEET;
THENCE ALONG A CURVE HAVING A RADIUS OF 49.93' AND A LENGTH OF 68.96' WITH A CHORD BEARING OF S 34°44'01" W AND A CHORD DISTANCE OF 63.61 FEET;
THENCE S 14°30'00" E A DISTANCE OF 82.90 FEET;
THENCE S 75°30'00" W A DISTANCE OF 131.82 FEET;
THENCE N 14°30'00" W A DISTANCE OF 554.09 FEET;
THENCE N 75°30'00" E A DISTANCE OF 97.50 FEET;
THENCE S 14°30'00" E A DISTANCE OF 60.00 FEET;
THENCE N 75°30'00" E A DISTANCE OF 137.50 FEET;
BACK TO THE POINT OF BEGINNING CONTAINING, 2.528 ACRES ALL LOCATED IN BLOCK 97 OF THE HYER SURVEY TO THE CITY OF HAMMOND, SECTION 25, T6S–R7E, GREENSBURG LAND DISTRICT, CITY OF HAMMOND, PARISH OF TANGIPAHOA, STATE OF LOUISIANA. THIS DESCRIPTION IS BASED ON THE BOUNDARY SURVEY AN PLAT MADE BY WILLIAM J. BODIN, JR. PROFESSIONAL LAND SURVEYOR, DATED 8–15–2016.

STATE OF LOUISIANA
WILLIAM J. BODIN JR.
REG. No. 4253
REGISTERED
LAND SURVEYOR

Wm. J. Bodin Jr.
WILLIAM J. BODIN, JR. C.E., P.L.S.
LA. REG. NO. 8193 & 4253

08–02–18
DATE

#	DATE	REVISION	BY	#	DATE	REVISION	BY
1.	11–14–16	CHANGED STREET WIDTH FORM 11' TO 12'	W.J.B.				
2.	11–15–16	NOTE: TO INCLUDE E. PARK STREET	W.J.B.				
2.	06–01–17	REVISED TO CORRECT STREET WIDTHS AND DRAINAGE AREAS.	W.J.B.				

BODIN AND WEBB, INC.
CONSULTING ENGINEERS
1024 S. CYPRESS
HAMMOND, LOUISIANA 70403
PH# (985) 345–3947 FAX# (985) 345–0213

RED LLC.
202 EAST ROBERT
HAMMOND, LA. 70401
OWNER

DESIGNED: W.J.B.	DATE: 08–08–17		
DRAWN: CDB			
CHECKED: W.J.B.	SCALE: 1"=30'		
APPROVED: W.J.B.			

FINAL PLAT
HAMMOND, LA

PROJECT NO. 1633
SHEET NO. 2 OF 14

S:\CAD Jobs\JOBS BY YEAR\2015\15321\10-4-16\CYPRESS CROSSING 10-4-2016\cypress crossings temp recover 08-02-18.dwg, 8/2/2018 1:48:27 PM, AutoCAD PDF (General Documentation).pc3

CYPRESS CROSSING SUBDIVISION

FINAL PLANS– SITE PLANHAMMOND, LA,
PARISH OF TANGIPAHOA
STATE OF LOUISIANA

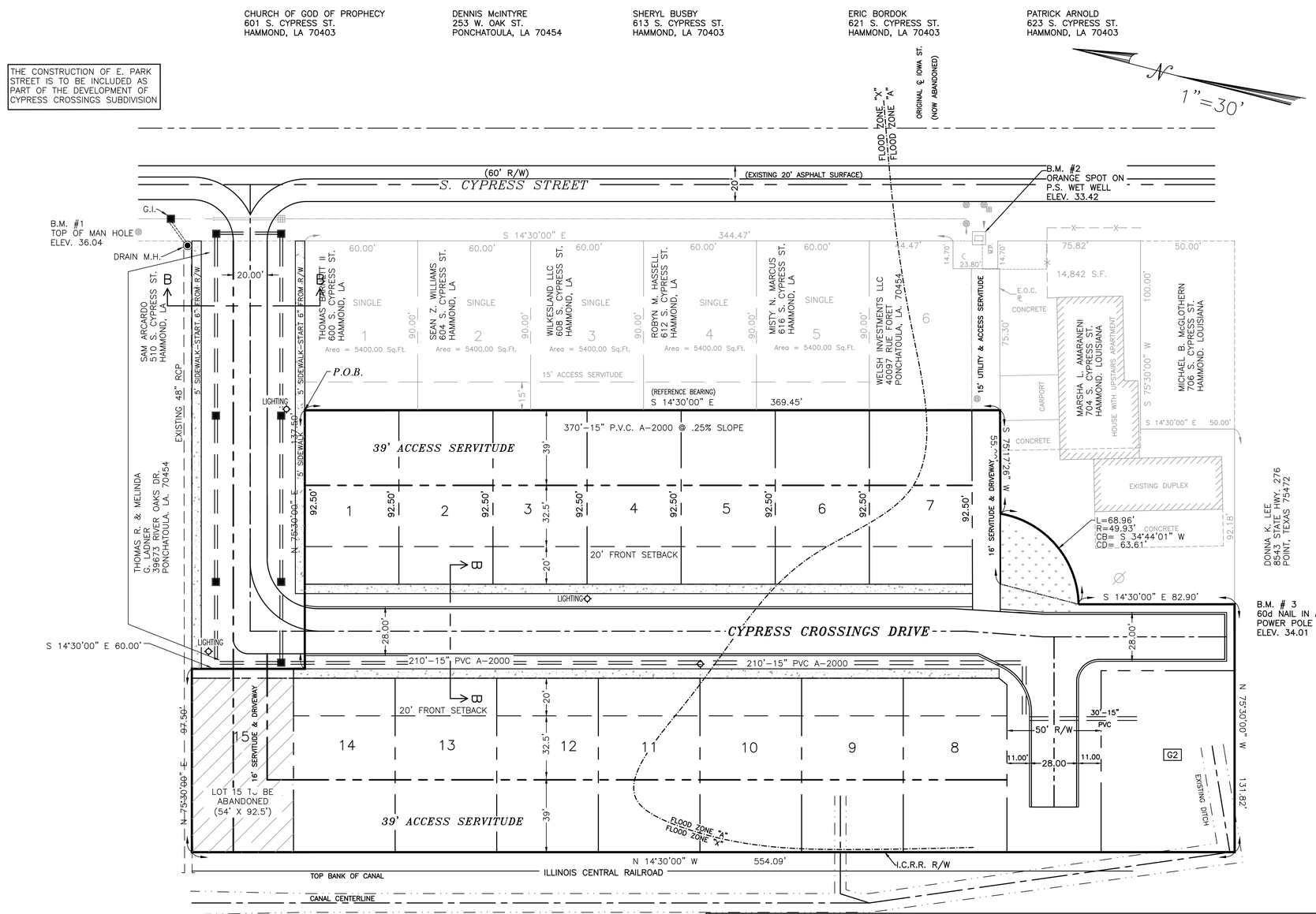

NOTES:
1.) ALL E–W LOT LINES ARE N 75°30'00" E UNLESS SHOWN OTHERWISE.
2.) ALL N–S LOT LINES ARE N 14°30'00" W UNLESS SHOWN OTHERWISE.
3.) GREEN SPACES G1 AND G2 TO BE MAINTAINED BY OWNER OF DEVELOPMENT

URGENT!
CONTRACTORS MUST CALL 811(ONE CALL) PRIOR TO DIGGING.

SERVITUDES

EXISTING SERVITUDES (TO BE ABANDONED)

1. 15' UTILITY MEASURING 7.5' NORTH AND 7.5' SOUTH OF ORIGINAL CENTERLINE OF E. IOWA STREET FROM W. R/W OF S. CYPRESS STREET TO THE E. R/W OF I.C.R.R., AS PER SURVEY PLATS BY GILBERT SULLIVAN DATED 4/28/98 AND 9/30/00.
2. 15' X 34.09' SERVITUDE FOR SEWAGE LIFT STATION FRONTING 34.09' ALONG W. R/W OF CYPRESS STREET BEGINNING AT A POINT 30' SOUTH OF THE ORIGINAL CENTERLINE OF E. IOWA STREET AS PER SURVEY PLAT BY GILBERT SULLIVAN DATED 4/28/98.
3. THE ABOVE SERVITUDES ARE, BY ACCEPTANCE OF THIS PLAT, ABANDONED BY THE CITY OF HAMMOND IN FAVOR OF NEW UTILITY SERVITUDES AS SHOWN ON THIS PLAT OF CYPRESS VILLAGE SUBDIVISION BY BODIN AND WEBB, INC., DATED 01/16/02
4. SERVITUDES RUN PARALLEL AND ADJACENT TO LOT LINES.

STATE OF LOUISIANA
WILLIAM J. BODIN, JR.
REG. No. 8193
REGISTERED
PROFESSIONAL ENGINEER
IN
CIVIL ENGINEERING

WILLIAM J. BODIN, JR. C.E., P.L.S.
LA. REG. NO. 8193 & 4253

07–16–18
DATE

#	DATE	REVISION	BY
1.	11–14–16	CHANGED STREET WIDTH FORM 11' TO 12'	W.J.B.
2.	11–15–16	NOTE: TO INCLUDE E. PARK STREET	W.J.B.
2.	06–01–17	REVISED TO CORRECT STREET WIDTHS AND DRAINAGE AREAS.	W.J.B.

BODIN AND WEBB, INC.
CONSULTING ENGINEERS
1024 S. CYPRESS
HAMMOND, LOUISIANA 70403
PH# (985) 345–3947 FAX# (985) 345–0213

RED LLC.
202 EAST ROBERT
HAMMOND, LA. 70401
OWNER

DESIGNED: W.J.B.
DRAWN: CDB
CHECKED: W.J.B.
APPROVED: W.J.B.
DATE: 08–08–17
SCALE: 1"=30'

SITE PLAN–LOT LAYOUT
HAMMOND, LA

PROJECT NO. 1633
SHEET NO. 3 OF 14

S:\CAD Jobs\JOBS BY YEAR\2015\15321\10-4-16\CYPRESS CROSSING 10-4-2016\cypress crossings temp recover 08-02-18.dwg, 8/2/2018 1:53:20 PM, AutoCAD PDF (General Documentation).pc3

CYPRESS CROSSINGS SUBDIVISION

FINAL PLANS—TOPOGRAPHIC MAP
CITY OF HAMMOND, PARISH OF TANGIPAHOA
STATE OF LOUISIANA

CHURCH OF GOD OF PROPHECY
601 S. CYPRESS ST.
HAMMOND, LA 70403

DENNIS McINTYRE
253 W. OAK ST.
PONCHATOULA, LA 70454

SHERYL BUSBY
613 S. CYPRESS ST.
HAMMOND, LA 70403

ERIC BORDOK
621 S. CYPRESS ST.
HAMMOND, LA 70403

PATRICK ARNOLD
623 S. CYPRESS ST.
HAMMOND, LA 70403

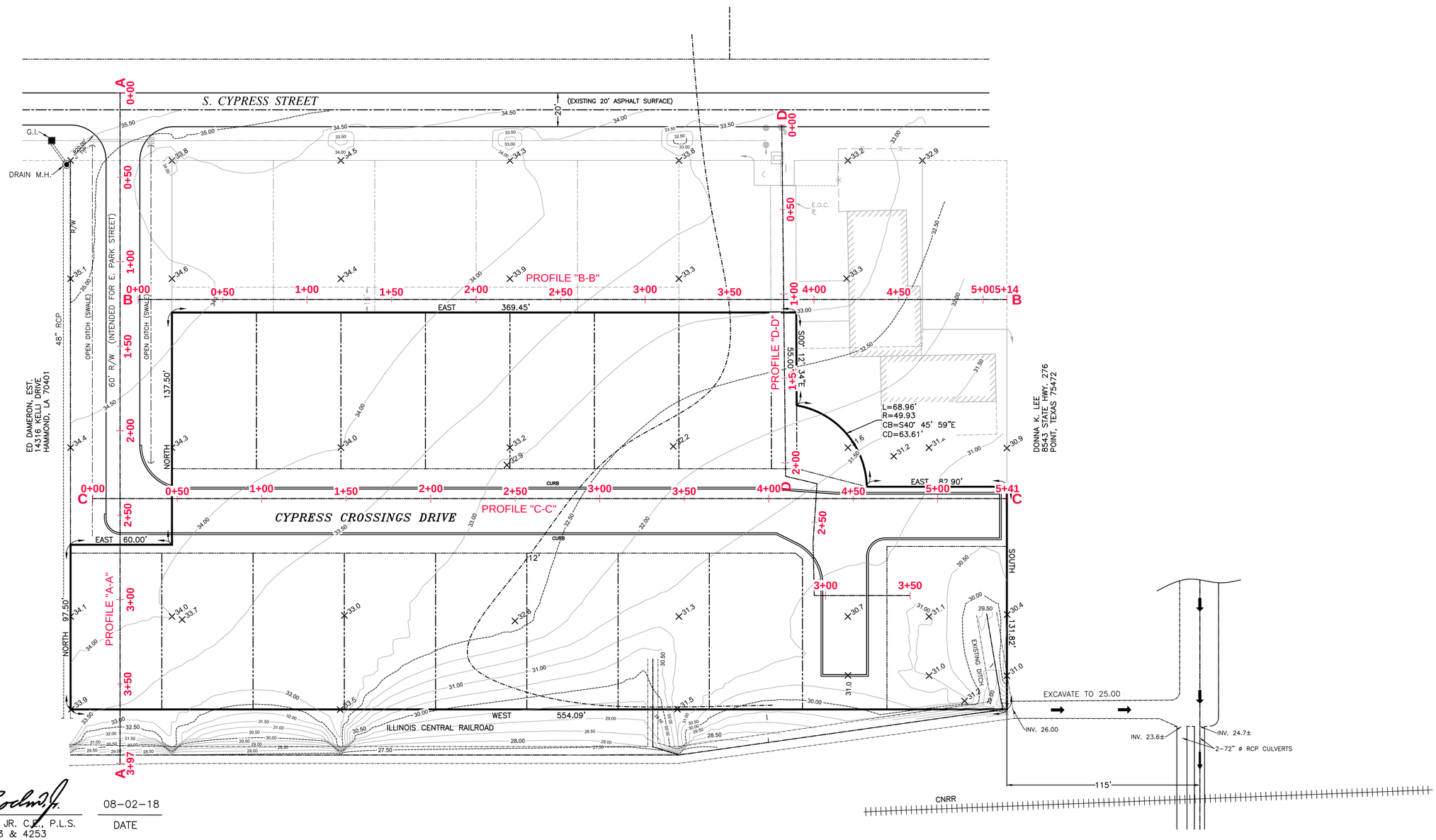

STATE OF LOUISIANA
WILLIAM J. BODIN JR.
REG. No. 8193
REGISTERED
PROFESSIONAL ENGINEER
IN
CIVIL ENGINEERING

WILLIAM J. BODIN, JR. C.E., P.L.S.
LA. REG. NO. 8193 & 4253

08-02-18
DATE

#	DATE	REVISION	BY	#	DATE	REVISION	BY

BODIN AND WEBB, INC.
CONSULTING ENGINEERS
1024 S. CYPRESS
HAMMOND, LOUISIANA 70403
PH# (985) 345-3947 FAX# (985) 345-0213

RED LLC.
200 E.ROBERT STREET
HAMMOND, LA. 70403
OWNER

DESIGNED: W.J.B.	DATE: 9/14/2016		
DRAWN: CDB			
CHECKED: W.J.B.	SCALE:		
APPROVED: W.J.B.			

TOPOGRAPHY MAP
HAMMOND, LA

PROJECT NO. 1633
SHEET NO. 4 OF 14

S:\CAD Jobs\JOBS BY YEAR\2015\15321\10-3-16\CYPRESS CROSSING.dwg, 8/2/2018 1:59:09 PM, AutoCAD PDF (General Documentation).pc3

CYPRESS CROSSINGS SUBDIVISION

FINAL PLANS–WATER & SEWER LAYOUT
HAMMOND, LA, PARISH OF TANGIPAHOA
STATE OF LOUISIANA

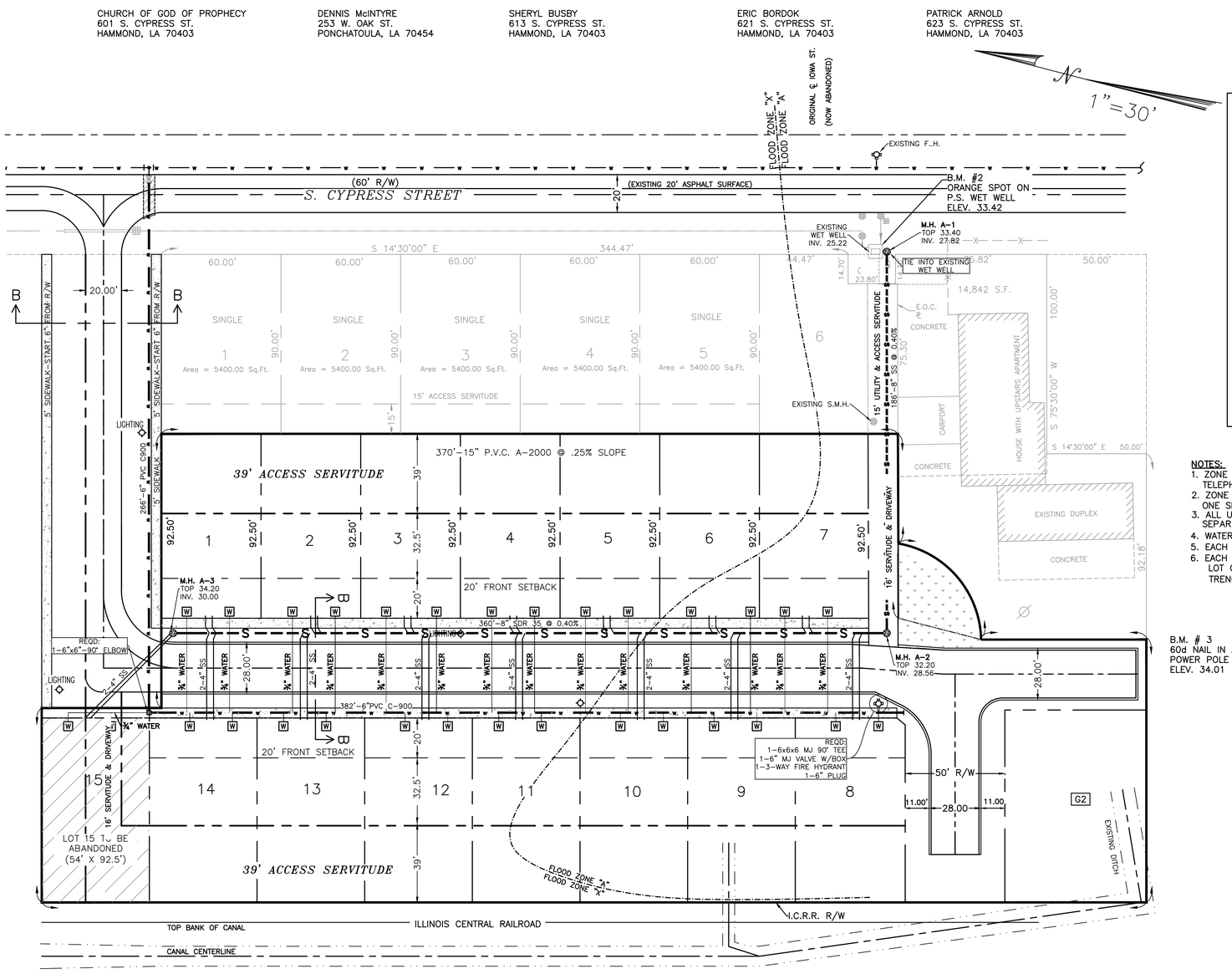

SPECIFICATIONS

WATER SYSTEM:

WATER LINES	6" P.V.C. C–900 2" P.V.C. SCHEDULE 40
VALVES	MUELLER OR M.H. CAST IRON WITH 2" SQUARE OPERATING NUT, RESILIENT SEAT AND CAST IRON VALVE BOX
FITTINGS	DUCTILE IRON–MECHANICAL JOINT FOR 6" AND 8" SIZES. P.V.C. SLIP JOINT FOR 3" SIZE OR SMALLER.

SEWER SYSTEM:

SEWER PIPE (8")	P.V.C. SDR 35 SLIP JOINT
FITTINGS	P.V.C. SDR 35 SLIP JOINT

DRAINAGE:

CMP, CMPA	ASPHALT COATED GALV., CORRUGATED METAL PIPE ASTM M–36 15" TO 24"–16 GAGE 30" TO 48"–14 GAGE CONCRETE END COLLARS RECOMENDED ON LARGE OUTFALL PIPES

FIRE HYDRANT:

3–WAY HYDRANT WITH 6" BARRELL BY M.H. OR MULLER

ROADWAY:

SUB–BASE	SCARIFIED TO 12" DEPTH AND COMPACTED TO 95% DENSITY, STD. PROCTOR
BASE	8" SOIL CEMENT, 10% CEMENT BY VOLUME, COMPACTED TO 95% DENSITY BY STD. PROCTOR OR 8" CRUSHED LIMESTONE (#610), COMPACTED TO 95% STD. PROCTOR
WEARING SURFACE	2" THICK ASPHALTIC CONCRETE, LA. HWY. DEPT., SPEC. FOR WEARING COURSES

NOTES:

1. ZONE "X" FOR TELECOMMUNICATIONS (ie. TELEPHONE, CABLE, ETC.)
2. ZONE "Y" FOR ELECTRIC (MAIN FEED, ONE SIDE ONLY.)
3. ALL UTILITIES MUST MAINTAIN 1 FOOT SEPARATION BETWEEN OTHER ZONES AND UTILITIES
4. WATER TO HAVE A MINIMUM OF 30" COVER
5. EACH DUPLEX TO RECEIVE 2–3/4" SERVICE P.E. PIPE
6. EACH DUPLEX TO RECEIVE 2–4" PVC SERVICE TO ℄ OF LOT OR BUILDING. SEWER MAY BE PLACED IN SAME TRENCH WITH 12" CLEAR SPACE BETWEEN PIPES.

DEFLECTION TEST:

A. DEFLECTION TEST SHALL BE PERFORMED ON ALL FLEXIBLE PIPES. THE TEST SHALL BE CONDUCTED AFTER THE FINAL BACKFILL HAS BEEN IN PLACE AT LEAST 30 DAYS TO PERMIT STABILIZATION OF THE SOIL–PIPE SYSTEM.
B. NO PIPE SHALL EXCEED A DEFLECTION OF 5% OF THE INSIDE DIAMETER. IF DEFLECTION EXCEEDS 5%, THE PIPE SHALL BE EXCAVATED. REPLACEMENT OR CORRECTION SHALL BE ACCOMPLICE IN ACCORDANCE WTH THE REQUIREMENTS IN THE APPROVED SPECIFICATIONS.
C. THE RIGID BALL OR MANDREL USED FOR THE DEFLECTION TEST SHALL HAVE A DIAMETER NO LESS THAN 95% OF THE BASE INSIDE DIAMETER OF OR AVERAGE INSIDE DIAMETER OF THE PIPE, DEPENDING ON WHICH IS SPECIFIED IN THE ASTM SPECIFICATION, INCLUDING THE APPENDIX, TO WHICH THE PIPE IS MANUFACTURED. THE TEXT SHALL BE PERFORMED WITHOUT MECHANICAL PULLING DEVICES.

LEAKAGE TEST:

THE LEAKAGE SHALL BE SPECIFIED. THIS MAY INCLUDE APPROPRIATE WATER OR LOW PRESSURE AIR TESTING. THE TESTING METHODS SELECTED SHOULD TAKE INTO CONSIDERATION THE RANGE IN GROUND WATER ELEVATIONS DURING THE TESTING AND THOSE ANTICIPATED DURING THE DESIGN LIFE OF THE SEWER.

WATER (HYDRAULIC) TEST

THE LEAKAGE EXFILTRATION OR INFILLTRATION SHALL NOT EXCEED 100 GALLONS PER INCH OF PIPE DIAMETER PER MILE PER DAY [9 L/mm OF PIPE DIAMETER.km.D)] FOR ANY SECTION OF THE SYSTEM. AN EXFILTRATION OR INFILLTRATION TEST SHALL BE PREFORMED MINIMUM POSITIVE HEAT OF 2 FEET (0.6m).

NOTES:

1. HYDROSTATIC AND STERILIZATION PRESSURE TEST: ALL WATER MAINS AS PER AWWA STANDARDS.

A) AWWA C600 SECTION 5.2 HYDROSTATIC TESTING
THE LEAKAGE EXFILTRATION OR INFILTRATION SHALL NOT EXCEED 100 GALLONS PER INCH OF PIPE DIAMETER PER MILE PER DAY [9 L/(MM OF PIPE DIAMETER•KM•D)] FOR ANY SECTION OF THE SYSTEM. AN EXFILTRATION OR INFILTRATION TEST SHALL BE PERFORMED WITH A MINIMUM POSITIVE HEAD OF 2 FEET (0.6 M).

B) DISINFECTION: WATER LINES SHALL BE DISINFECTED PER LAC 51:XII.353.A.
PUMPS, PIPES WELLS, TANKS AND OTHER PARTS OF NEW SYSTEMS SHALL BE THOROUGHLY DISINFECTED BY THE USE OF CHLORINE OR CHLORINE COMPOUNDS BEFORE BEING PLACED IN USE. THE RATE OF APPLICATION OF CHLORINE SHALL BE IN SUCH PROPORTION TO THE RATE OF WATER ENTERING THE PIPE OR OTHER APPURTENANCES THAT THE CHLORINE DOSE APPLIED TO THE WATER SHALL BE AT LEAST 50MG/L. CHLORINATED WATER SHALL BE RETAINED LONG ENOUGH TO DESTROY NON–SPORE–FORMING BACTERIA. THE PERIOD SHALL BE AT LEAST THREE HOURS OR PREFERABLY LONGER, AS MAY BE DIRECTED . AFTER THE CHLORINE TREATED WATER HAS BEEN RETAINED FOR THE REQUIRED TIME, THE CHLORINE RESIDUAL AT PIPE EXTREMITIES AND OTHER REPRESENTATIVE POINTS SHALL BE AT LEAST 5MG/L. IF THE RESIDUAL IS LESS THAN 5MG/L, DISINFECTION PROCEDURE SHALL BE REPEATED UNTIL A 5MG/L RESIDUAL IS OBTAINED, AS REQUIRED ABOVE.

2. ALL TEES, BENDS, PLUGS AND HYDRANTS ARE TO BE PROVIDED WITH REACTION OR THRUST BLOCKING.

3. SEPARATION OF WATER LINES AND SEWER LINES:
MINIMUM HORIZONTAL AND VERTICAL SEPARATION OF 6 FEET AND 18" INCHES RESPECTIVELY WILL BE MAINTAINED BETWEEN THE OUTSIDE EDGE OF WATER MAINS AND THE OUTSIDE EDGE OF ANY SEWERS, SEWER MANHOLES, WET WELLS, FORCE MAINS AND GRAVITY MAINS.

4. SEWER LINE DEFLECTION TESTING:
DEFLECTION TESTS SHALL BE PERFORMED ON ALL FLEXIBLE PIPE. THE TESTS SHALL BE CONDUCTED AFTER THE FINAL BACKFILL HAS BEEN IN PLACE AT LEAST 30 DAYS TO PERMIT STABILIZATION OF THE SOIL–PIPE SYSTEM. NO PIPE SHALL EXCEED A DEFLECTION OF 5 PERCENT OF THE INSIDE DIAMETER. IF DEFLECTION EXCEEDS 5 PERCENT, THE PIPE SHALL BE EXCAVATED. REPLACEMENT OR CORRECTION SHALL BE ACCOMPLISHED IN ACCORDANCE WITH THE REQUIREMENTS IN THE APPROVED SPECIFICATIONS. THE RIGID BALL OR MANDREL USED FOR THE DEFLECTION TEST SHALL HAVE A DIAMETER NOT LESS THAN 95 PERCENT OF THE BASE INSIDE DIAMETER OR AVERAGE INSIDE DIAMETER OF THE PIPE DEPENDING ON WHICH IS SPECIFIED IN THE ASTM SPECIFICATION, INCLUDING THE APPENDIX, TO WHICH THE PIPE IS MANUFACTURED. THE TESTS SHALL BE PERFORMED WITHOUT MECHANICAL PULLING DEVICES.

STATE OF LOUISIANA
WILLIAM J. BODIN JR.
REG. No. 8193
REGISTERED PROFESSIONAL ENGINEER IN CIVIL ENGINEERING

WILLIAM J. BODIN, JR. C.E., P.L.S.
LA. REG. NO. 8193 & 4253

08–02–18
DATE

#	DATE	REVISION	BY
1.	11–14–16	CHANGED STREET WIDTH FORM 11' TO 12'	W.J.B.
2.	11–15–16	NOTE: TO INCLUDE E. PARK STREET	W.J.B.
2.	06–01–17	REVISED TO CORRECT STREET WIDTHS AND DRAINAGE AREAS.	W.J.B.

#	DATE	REVISION	BY

BODIN AND WEBB, INC.
CONSULTING ENGINEERS
1024 S. CYPRESS
HAMMOND, LOUISIANA 70403
PH# (985) 345–3947 FAX# (985) 345–0213

RED LLC.
202 EAST ROBERT
HAMMOND, LA. 70401
OWNER

DESIGNED: W.J.B.	DATE: 08–08–17		
DRAWN: CDB			
CHECKED: W.J.B.	SCALE: 1"=30'		
APPROVED: W.J.B.			

WATER & SEWER LAYOUT

PROJECT NO. 1633
SHEET NO. 5 OF 14

S:\CAD Jobs\JOBS BY YEAR\2015\15321\10-4-16\CYPRESS CROSSING 10-4-2016\cypress crossings temp recover 08-02-18.dwg, 8/2/2018 2:01:42 PM, AutoCAD PDF (General Documentation).pc3

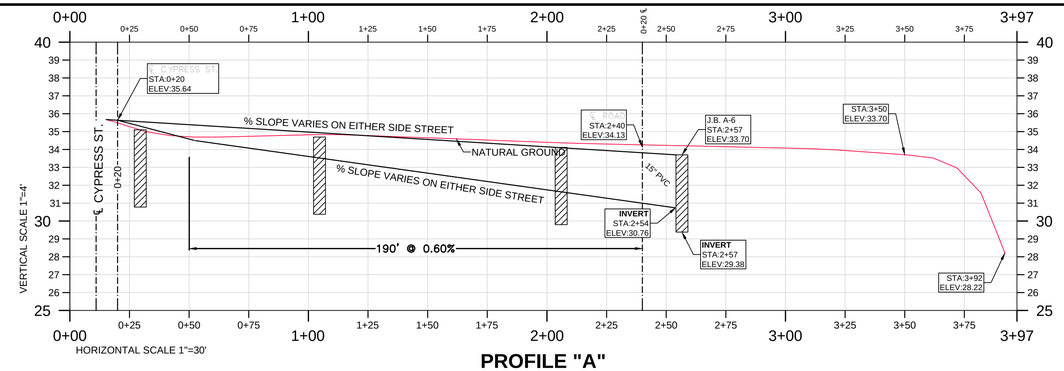

PROFILE "A"

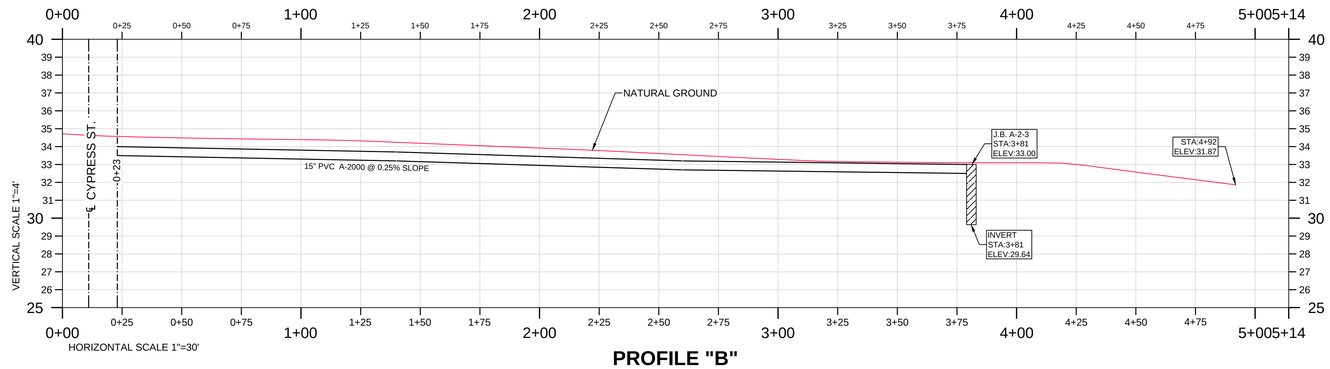

PROFILE "B"

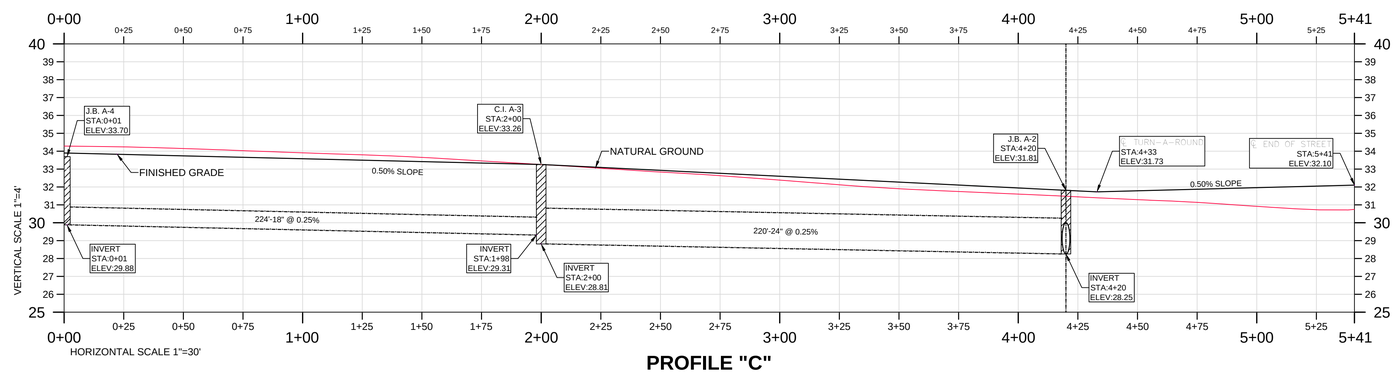

PROFILE "C"

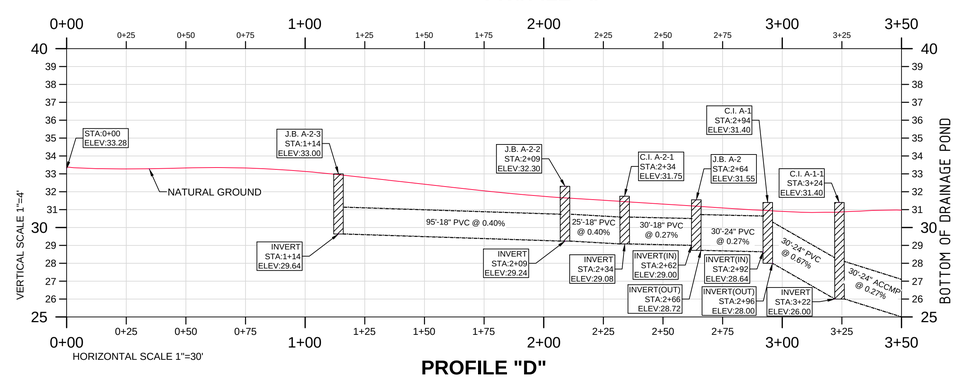

PROFILE "D"

(CYPRESS STREET TO DRAINAGE POND)

WILLIAM J. BODIN, JR. C.E., P.L.S.
LA. REG. NO. 8193 & 4253

08–02–18
DATE

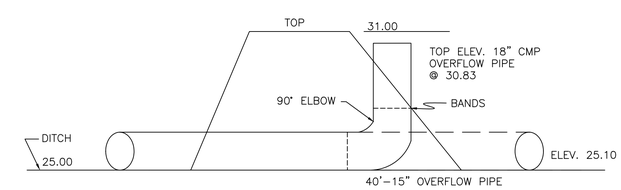

SECTION THROUGH DIKE
AT OUTFALL PIPES

#	DATE	REVISION	BY	#	DATE	REVISION	BY
1.	11–14–16	CHANGED STREET WIDTH FORM 11' TO 12'	W.J.B.				
2.	11–15–16	NOTE: TO INCLUDE E. PARK STREET	W.J.B.				
2.	06–01–17	REVISED TO CORRECT STREET WIDTHS AND DRAINAGE AREAS.	W.J.B.				

BODIN AND WEBB, INC.
CONSULTING ENGINEERS
1024 S. CYPRESS
HAMMOND, LOUISIANA 70403
PH# (985) 345–3947 FAX# (985) 345–0213

RED LLC.
202 EAST ROBERT
HAMMOND, LA. 70401
OWNER

DESIGNED: W.J.B.	DATE: 08–08–17	PROFILES	PROJECT NO. 1633
DRAWN: CDB			SHEET NO. 7 OF 14
CHECKED: W.J.B.	SCALE: 1"=30'		
APPROVED: W.J.B.			

S:\CAD Jobs\JOBS BY YEAR\2015\15321\10-4-16\CYPRESS CROSSING 10-4-2016\cypress crossings temp recover 08-02-18.dwg, 8/2/2018 2:46:05 PM, AutoCAD PDF (General Documentation).pc3

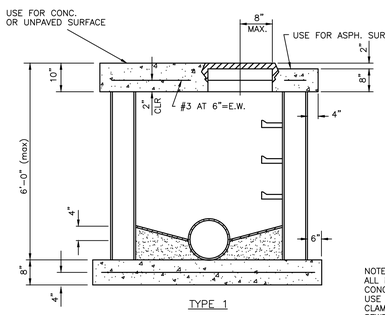

SHALLOW MANHOLE

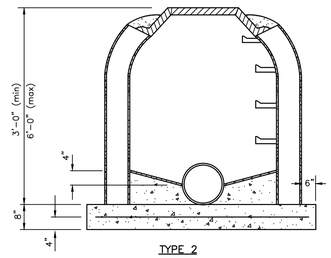

SHALLOW MANHOLE

NOTE:
ALL MANHOLES TO BE PRECAST CONCRETE.
USE RUBBER BOOTS W/S.S. CLAMPS CONNECTORS FOR 8" SEWER PIPES @ MANHOLES.

NOTES:
1. MANHOLES WILL BE PRECAST, REINF. CONC. MANHOLE RISERS AND TOPS CONFORMING TO A.S.T.M. C – 478 WITH JOINTS OF "RAM–NEK" PREFORMED PLASTIC ROPE AS MANUFACTURED BY K.T. SNYDER, OF HOUSTON, TX. OR A.S.T.M. C – 443 RUBBER GASKET
2. CONTRACTOR MAY FURNISH EITHER SHALLOW MANHOLE AND FRAME DETAILED

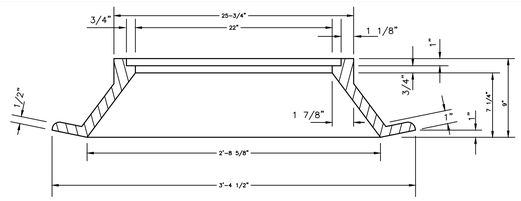

SHALLOW MANHOLE FRAME

APPROX. WT. 315#

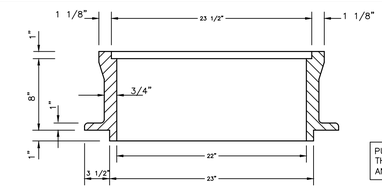

MANHOLE FRAME

APPROX. WT. 235#

"ALL NEW SUBDIVISIONS MUST INSTALL" METER (AS REQUIRED BY CITY WATER DEPT.) BADGER NAME BRAND (MUST BE RADIO REMOTE READY) RESIDENTIAL DEVELOPMENTS TO USE ⅝"x¾" RECORDALL M25 7–½" LAY LENGTH, RTR, ORION PIT MODULE. BRONZE HOUSING BOTTOM, GALLON, PLASTIC LID, PLASTIC SHROUD, 3' LEAD.

ALL CONNECTIONS AND LEADS MUST BE INSTALLED PRIOR TO INSPECTION

PURCHASE AND INSTALLATION WILL BE THE RESPONSIBILITY OF THE DEVELOPER AND/OR CONTRACTOR DURING CONSTRUCTION.

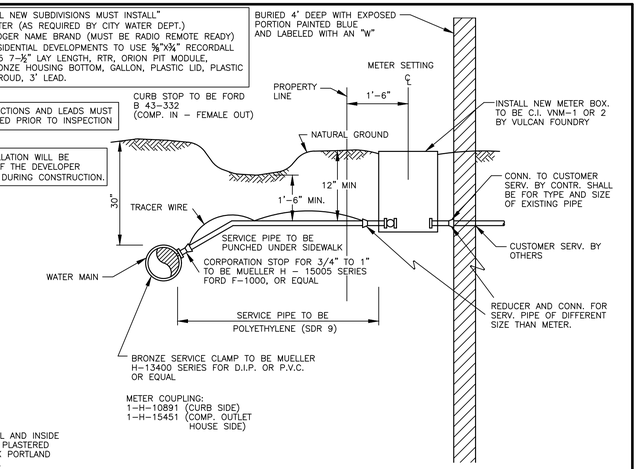

TYPICAL WATER SERVICE ASSEMBLY

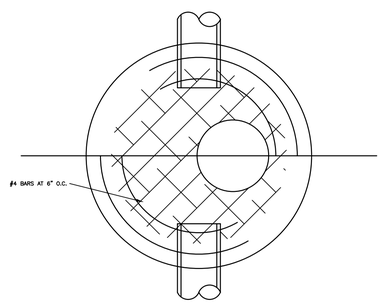

PLAN

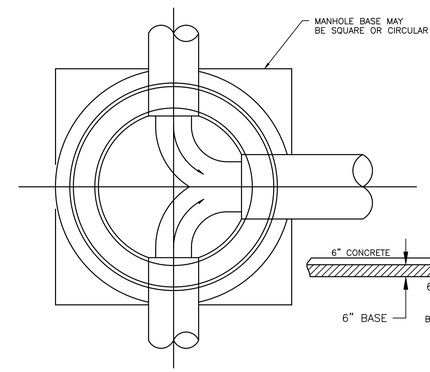

PLAN

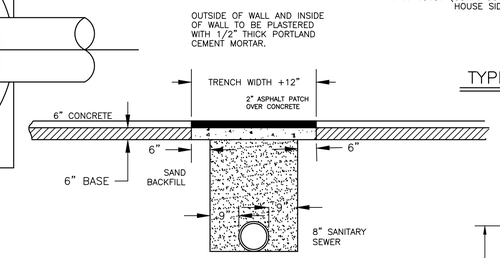

TYPICAL UTILITY OR DRAINAGE CROSSING

SCALE: 1"=2'
(WHERE REQUIRED)

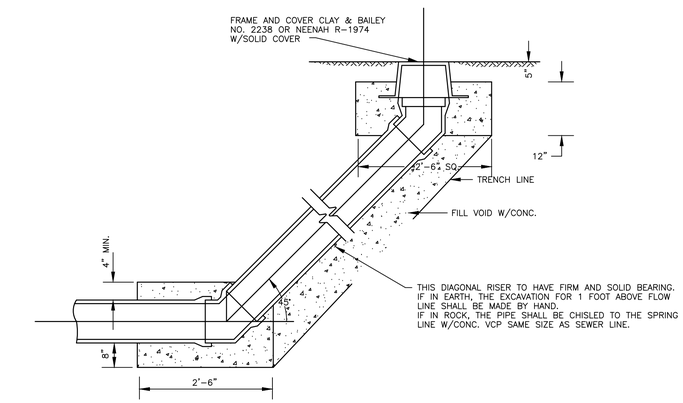

CLEANOUT

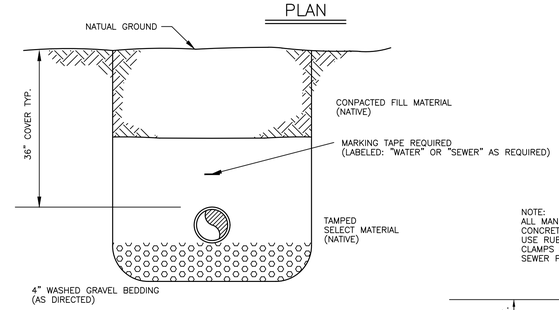

TYPICAL TRENCH BEDDING AND BACKFILL REQUIREMENTS FOR WATER/SEWER PIPE

NOTE:
ALL MANHOLES TO BE PRECAST CONCRETE.
USE RUBBER BOOTS W/S.S. CLAMPS CONNECTORS FOR 8" SEWER PIPES @ MANHOLES.

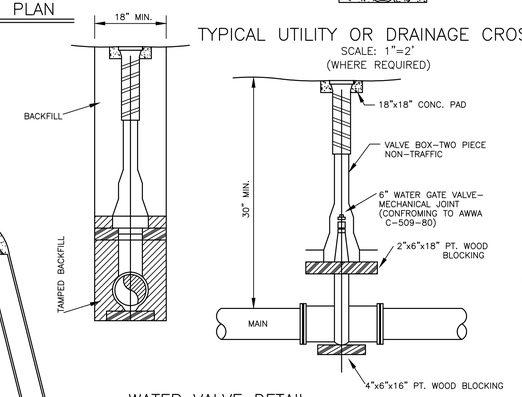

WATER VALVE DETAIL

⊗ – DUG (2) 8' DEEP HOLE NO SAND ENCOUNTERED

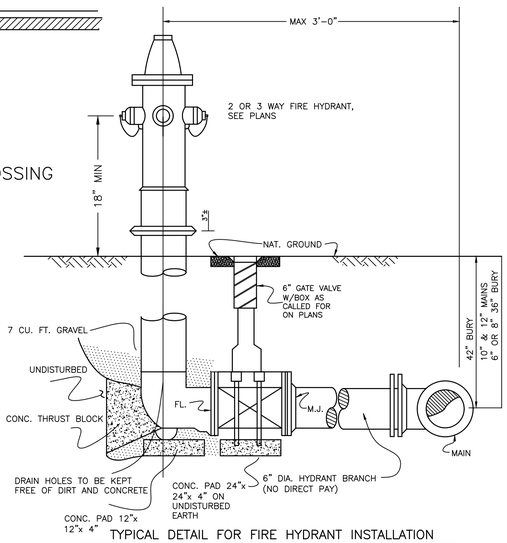

TYPICAL DETAIL FOR FIRE HYDRANT INSTALLATION

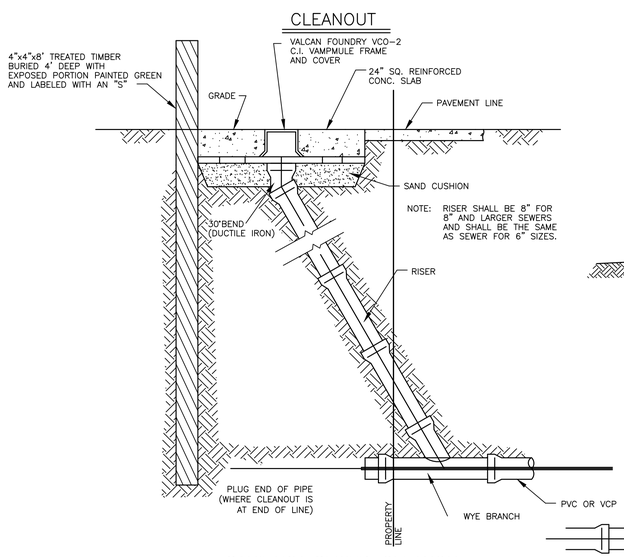

SANITARY SEWER CLEANOUT

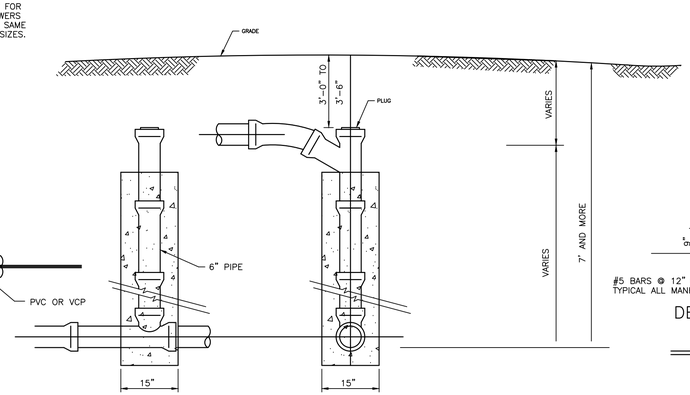

SIDE ELEVATION END ELEVATION

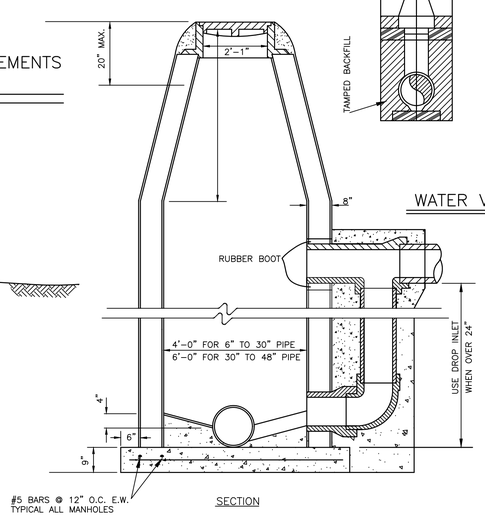

SECTION

DETAIL OF STANDARD PRECAST CONCRETE MANHOLE W/ DROP INLET

STATE OF LOUISIANA
WILLIAM J. BODIN, JR.
REG. No. 8193
REGISTERED PROFESSIONAL ENGINEER IN CIVIL ENGINEERING

WILLIAM J. BODIN, JR. C.E., P.L.S.
LA. REG. NO. 8193 & 4253

08–02–18
DATE

#	DATE	REVISION	BY	#	DATE	REVISION	BY
1.	11–14–16	CHANGED STREET WIDTH FORM 11' TO 12'	W.J.B.				
2.	11–15–16	NOTE: TO INCLUDE E. PARK STREET	W.J.B.				
2.	06–01–17	REVISED TO CORRECT STREET WIDTHS AND DRAINAGE AREAS.	W.J.B.				

BODIN AND WEBB, INC.
CONSULTING ENGINEERS
1024 S. CYPRESS
HAMMOND, LOUISIANA 70403
PH# (985) 345–3947 FAX# (985) 345–0213

RED LLC.
202 EAST ROBERT
HAMMOND, LA. 70401
OWNER

DESIGNED: W.J.B.	DATE: 08–08–17	WATER & SEWER DETAIL	PROJECT NO. 1633
DRAWN: CDB			
CHECKED: W.J.B.	SCALE: 1"=30'		SHEET NO. 8 OF 14
APPROVED: W.J.B.			

S:\CAD Jobs\JOBS BY YEAR\2015\15321\10-4-16\CYPRESS CROSSING 10-4-2016\cypress crossings temp recover 08-02-18.dwg, 8/2/2018 2:46:42 PM, AutoCAD PDF (General Documentation).pc3

CYPRESS CROSSINGS SUBDIVISION

FINAL PLANS–STREET & DRAINAGE PLAN
HAMMOND, LA, PARISH OF TANGIPAHOA
STATE OF LOUISIANA

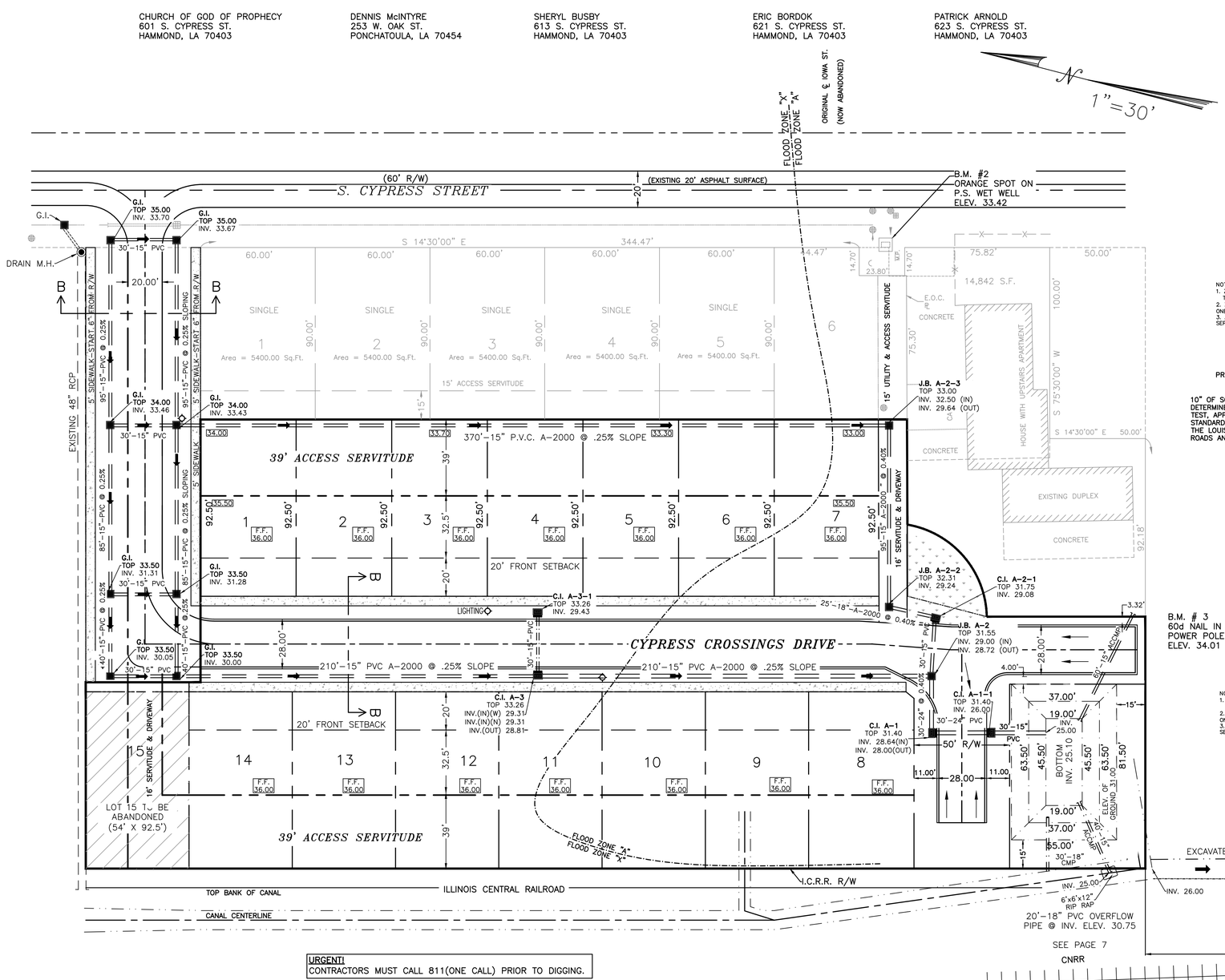

URGENT!
CONTRACTORS MUST CALL 811(ONE CALL) PRIOR TO DIGGING.

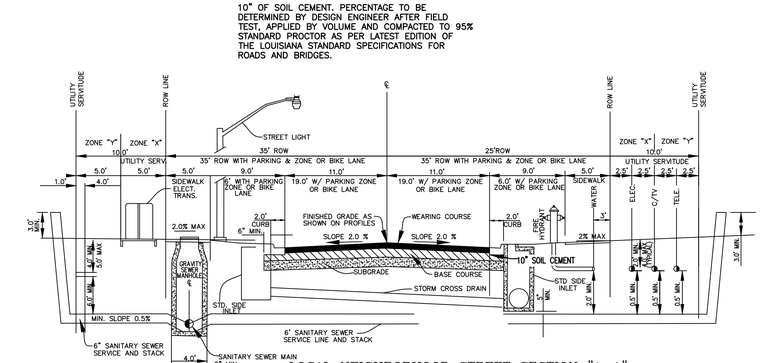

NOTES:
1. ZONE "X" FOR TELECOMMUNICATIONS (ie. TELEPHONE, CABLE, ETC.)
2. ZONE "Y" FOR ELECTRIC (MAIN FEED, ONE SIDE ONLY.)
3. ALL UTILITIES MUST MAINTAIN 1 FOOT SEPARATION BETWEEN OTHER ZONES AND UTILITIES

LOCAL NEIGHBORHOOD STREET SECTION "A–A"
MAJOR STREET PLAN

N.T.S.
(SHOWING SPACE ALLOCATION OF PROPOSED UTILITY SERVICES)

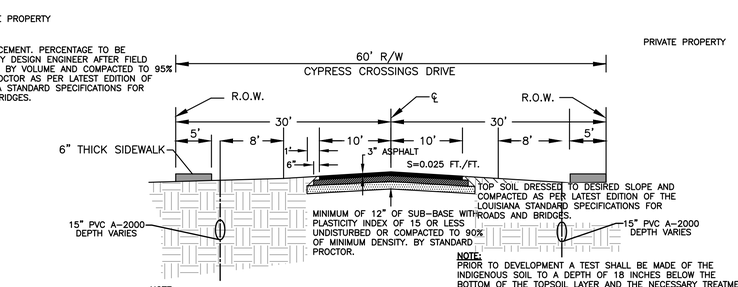

NOTE:
1.STREETS ARE TO HAVE MINIMUM OF 20' RADII AT ALL INTERSECTIONS WITH EXISTING STREETS OR HIGHWAYS TO HAVE 20' MINIMUM 20' RADII.
2. 3" ASPHALT SURFACE TO BE PLACED AS 1½" BINDERT COURSE AND 1½" WEARING COURSE.

NOTE:
PRIOR TO DEVELOPMENT A TEST SHALL BE MADE OF THE INDIGENOUS SOIL TO A DEPTH OF 18 INCHES BELOW THE BOTTOM OF THE TOPSOIL LAYER AND THE NECESSARY TREATMENT OF THE SUB-BASE AND THE BASE SHALL BE DETERMINED BY THE DESIGN ENGINEER ACCORDINGLY. THESE TESTS SHALL BE MADE AT A FREQUENCY OF ONE (1) FOR EVERY 1000 FEET OF ROADWAY OR A MINIMUM OF TWO (2) TESTS FOR ANY GIVEN SUBDIVISION.

TYPICAL ASPHALT STREET SECTION "B–B"

SCALE: N.T.S.

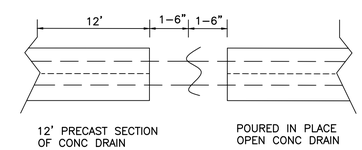

POUR IN PLACE CONC DRAIN UP TO WITHIN 1'–6" OF PRECAST SECTION. SET PRECAST SECTION ON JUNCTION BOX, WHERE REBARS OVERLAP AND POUR 1'–6" TO TIE THE TWO SECTIONS TOGETHER.

STATE OF LOUISIANA
WILLIAM J. BODIN, JR.
REG. No. 8193
REGISTERED PROFESSIONAL ENGINEER IN CIVIL ENGINEERING

WILLIAM J. BODIN, JR. C.E., P.L.S.
LA. REG. NO. 8193 & 4253

08–02–18
DATE

#	DATE	REVISION	BY	#	DATE	REVISION	BY
1.	11–14–16	CHANGED STREET WIDTH FORM 11' TO 12'	W.J.B.				
2.	11–15–16	NOTE: TO INCLUDE E. PARK STREET	W.J.B.				
2.	06–01–17	REVISED TO CORRECT STREET WIDTHS AND DRAINAGE AREAS.	W.J.B.				

BODIN AND WEBB, INC.
CONSULTING ENGINEERS
1024 S. CYPRESS
HAMMOND, LOUISIANA 70403
PH# (985) 345–3947 FAX# (985) 345–0213

RED LLC.
202 EAST ROBERT
HAMMOND, LA. 70401
OWNER

DESIGNED: W.J.B.	DATE: 08–08–17	
DRAWN: CDB		
CHECKED: W.J.B.	SCALE: 1"=30'	
APPROVED: W.J.B.		

STREET & DRAINAGE PLAN

PROJECT NO. 1633
SHEET NO. 6 OF 14

S:\CAD Jobs\JOBS BY YEAR\2015\15321\10-4-16\CYPRESS CROSSING 10-4-2016\cypress crossings temp recover 08-02-18.dwg, 8/2/2018 2:47:33 PM, AutoCAD PDF (General Documentation).pc3

CYPRESS CROSSINGS SUBDIVISION

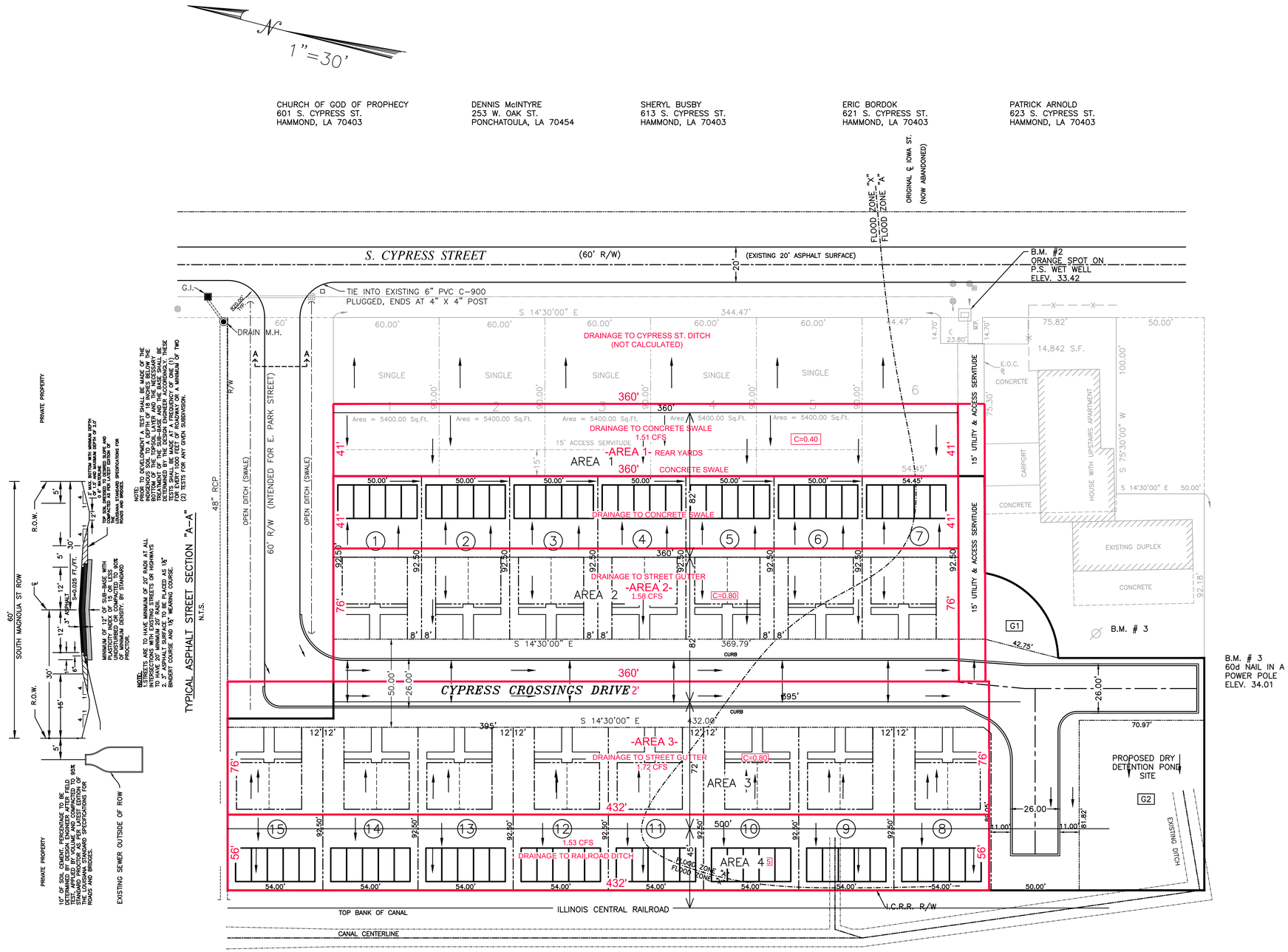

WILLIAM J. BODIN JR.
REG. No. 8193
REGISTERED
PROFESSIONAL ENGINEER
IN
CIVIL ENGINEERING
STATE OF LOUISIANA

WILLIAM J. BODIN, JR. C.E., P.L.S.
LA. REG. NO. 8193 & 4253

08-09-17
DATE

#	DATE	REVISION	BY	#	DATE	REVISION	BY
1.	11-14-16	CHANGED STREET WIDTH FORM 11' TO 12'	W.J.B.				
2.	11-15-16	NOTE: TO INCLUDE E. PARK STREET	W.J.B.				
2.	06-01-17	REVISED TO CORRECT STREET WIDTHS AND DRAINAGE AREAS.	W.J.B.				

BODIN AND WEBB, INC.
CONSULTING ENGINEERS
1024 S. CYPRESS
HAMMOND, LOUISIANA 70403
PH# (985) 345-3947 FAX# (985) 345-0213

CYPRESS CROSSINGS CONDOMINIUMS, LLC.
202 EAST ROBERT
HAMMOND, LA. 70401
OWNER

DESIGNED: W.J.B.	DATE: 08-08-17		
DRAWN: CDB			
CHECKED: W.J.B.	SCALE: 1"=30'		
APPROVED: W.J.B.			

DRAINAGE PATTERNS

PROJECT NO. 1633
SHEET NO. 9 OF 14

S:\CAD Jobs\JOBS BY YEAR\2015\15321\10-4-16\CYPRESS CROSSING 10-4-2016\CYPRESS CROSSING.dwg, 8/10/2017 9:09:30 AM, AutoCAD PDF (General Documentation).pc3

CYPRESS CROSSINGS SUBDIVISION

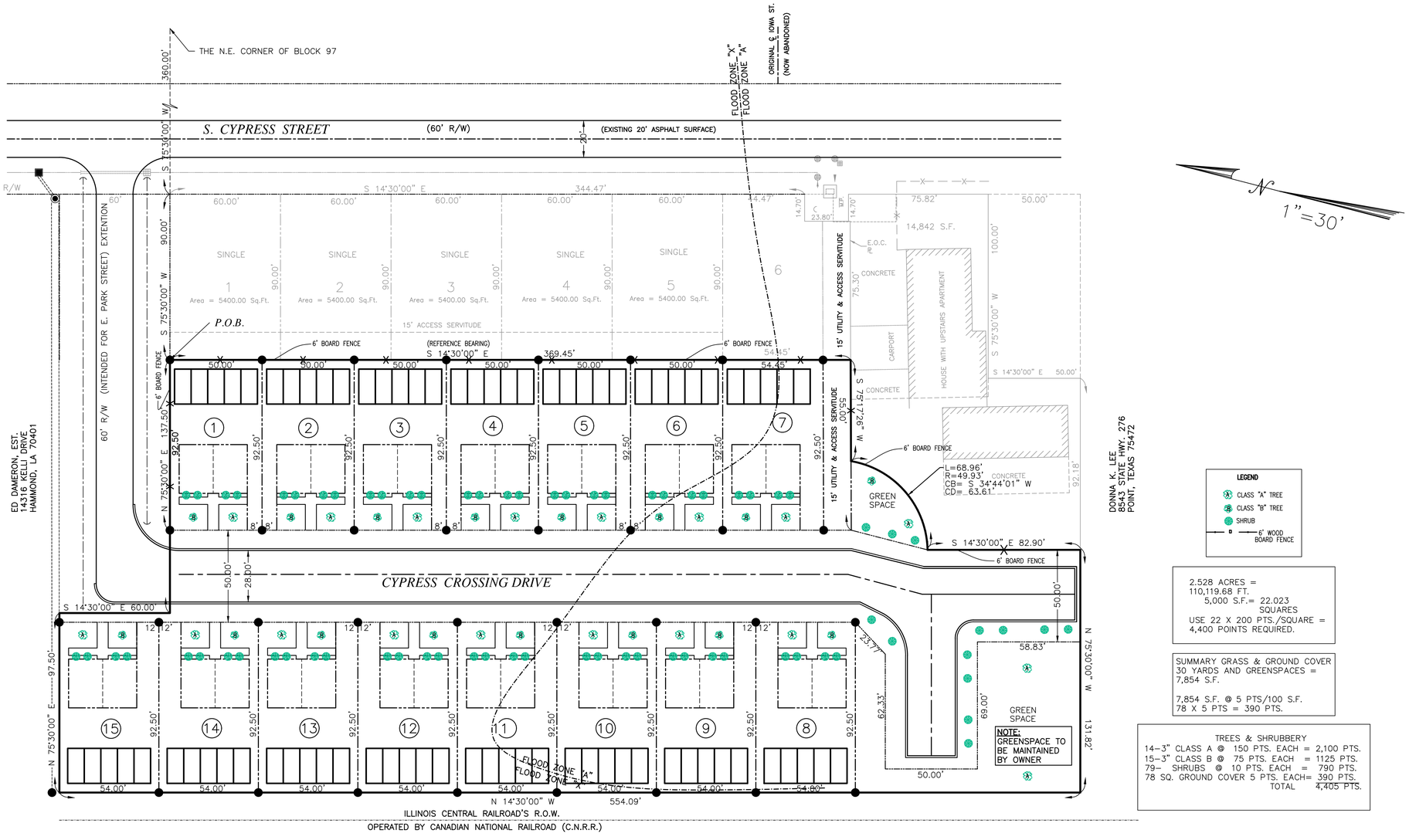

LEGEND

- CLASS "A" TREE
- CLASS "B" TREE
- SHRUB
- 6' WOOD BOARD FENCE

2.528 ACRES =
110,119.68 FT.
5,000 S.F.= 22.023 SQUARES
USE 22 X 200 PTS./SQUARE =
4,400 POINTS REQUIRED.

SUMMARY GRASS & GROUND COVER
30 YARDS AND GREENSPACES =
7,854 S.F.

7,854 S.F. @ 5 PTS/100 S.F.
78 X 5 PTS = 390 PTS.

TREES & SHRUBBERY

14–3" CLASS A	@ 150 PTS. EACH	=	2,100 PTS.
15–3" CLASS B	@ 75 PTS. EACH	=	1125 PTS.
79– SHRUBS	@ 10 PTS. EACH	=	790 PTS.
78 SQ. GROUND COVER	5 PTS. EACH	=	390 PTS.
	TOTAL		4,405 PTS.

STATE OF LOUISIANA
WILLIAM J. BODIN, JR.
REG. No. 8193
REGISTERED PROFESSIONAL ENGINEER IN CIVIL ENGINEERING

WILLIAM J. BODIN, JR. C.E., P.L.S.
LA. REG. NO. 8193 & 4253

08–02–18
DATE

#	DATE	REVISION	BY
1.	11–14–16	CHANGED STREET WIDTH FORM 11' TO 12'	W.J.B.
2.	11–15–16	NOTE: TO INCLUDE E. PARK STREET	W.J.B.
2.	06–01–17	REVISED TO CORRECT STREET WIDTHS AND DRAINAGE AREAS.	W.J.B.

#	DATE	REVISION	BY

BODIN AND WEBB, INC.
CONSULTING ENGINEERS
1024 S. CYPRESS
HAMMOND, LOUISIANA 70403
PH# (985) 345–3947 FAX# (985) 345–0213

RED LLC.
202 EAST ROBERT
HAMMOND, LA. 70401
OWNER

DESIGNED: W.J.B.	DATE: 08–08–17		
DRAWN: CDB			
CHECKED: W.J.B	SCALE: 1"=30'		
APPROVED: W.J.B.			

LANDSCAPE PLAN
HAMMOND, LA

PROJECT NO. 1633
SHEET NO. 10 OF 14

S:\CAD Jobs\JOBS BY YEAR\2015\15321\10-4-16\CYPRESS CROSSING 10-4-2016\cypress crossings temp recover 08-02-18.dwg, 8/2/2018 2:52:18 PM, AutoCAD PDF (General Documentation).pc3

CYPRESS CROSSING SUBDIVISION

FINAL PLANS– SITE EROSION CONTROL PLAN
HAMMOND, LA, PARISH OF TANGIPAHOA
STATE OF LOUISIANA

CHURCH OF GOD OF PROPHECY
601 S. CYPRESS ST.
HAMMOND, LA 70403

DENNIS McINTYRE
253 W. OAK ST.
PONCHATOULA, LA 70454

SHERYL BUSBY
613 S. CYPRESS ST.
HAMMOND, LA 70403

ERIC BORDOK
621 S. CYPRESS ST.
HAMMOND, LA 70403

PATRICK ARNOLD
623 S. CYPRESS ST.
HAMMOND, LA 70403

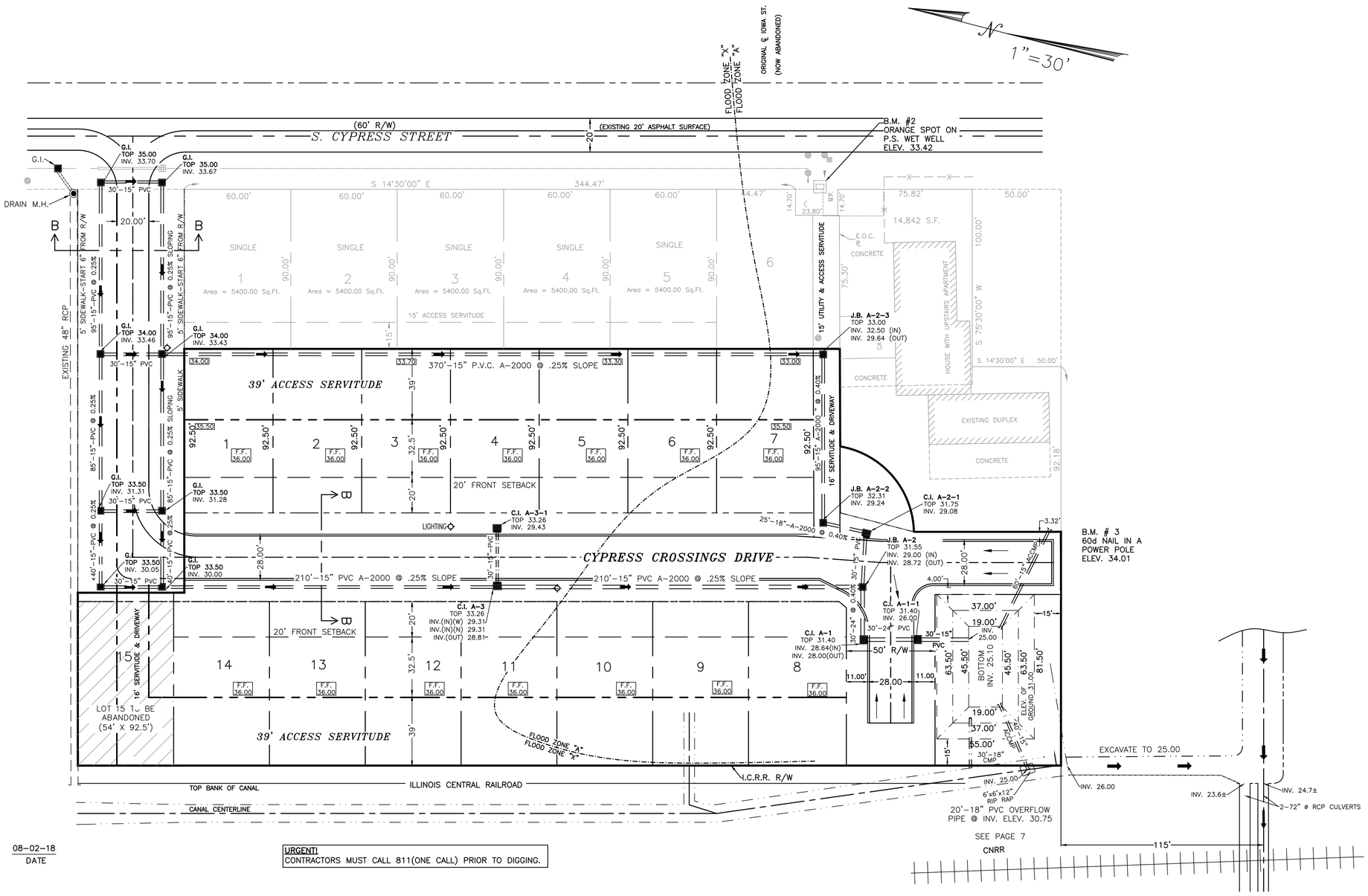

STATE OF LOUISIANA
WILLIAM J. BODIN JR.
REG. No. 8193
REGISTERED PROFESSIONAL ENGINEER IN CIVIL ENGINEERING

WILLIAM J. BODIN, JR. C.E., P.L.S.
LA. REG. NO. 8193 & 4253

08-02-18
DATE

URGENT!
CONTRACTORS MUST CALL 811(ONE CALL) PRIOR TO DIGGING.

#	DATE	REVISION	BY	#	DATE	REVISION	BY
1.	11-14-16	CHANGED STREET WIDTH FORM 11' TO 12'	W.J.B.				
2.	11-15-16	NOTE: TO INCLUDE E. PARK STREET	W.J.B.				
2.	06-01-17	REVISED TO CORRECT STREET WIDTHS AND DRAINAGE AREAS.	W.J.B.				

BODIN AND WEBB, INC.
CONSULTING ENGINEERS
1024 S. CYPRESS
HAMMOND, LOUISIANA 70403
PH# (985) 345-3947 FAX# (985) 345-0213

RED LLC.
202 EAST ROBERT
HAMMOND, LA. 70401
OWNER

DESIGNED: W.J.B.	DATE: 08-08-17		
DRAWN: CDB			
CHECKED: W.J.B.	SCALE: 1"=30'		
APPROVED: W.J.B.			

STORM WATER POLLUTION PREVENTION PLAN
HAMMOND, LA

PROJECT NO. 1633
SHEET NO. 11 OF 14

S:\CAD Jobs\JOBS BY YEAR\2015\15321\10-4-16\CYPRESS CROSSING 10-4-2016\cypress crossings temp recover 08-02-18.dwg, 8/2/2018 3:00:37 PM, AutoCAD PDF (General Documentation).pc3

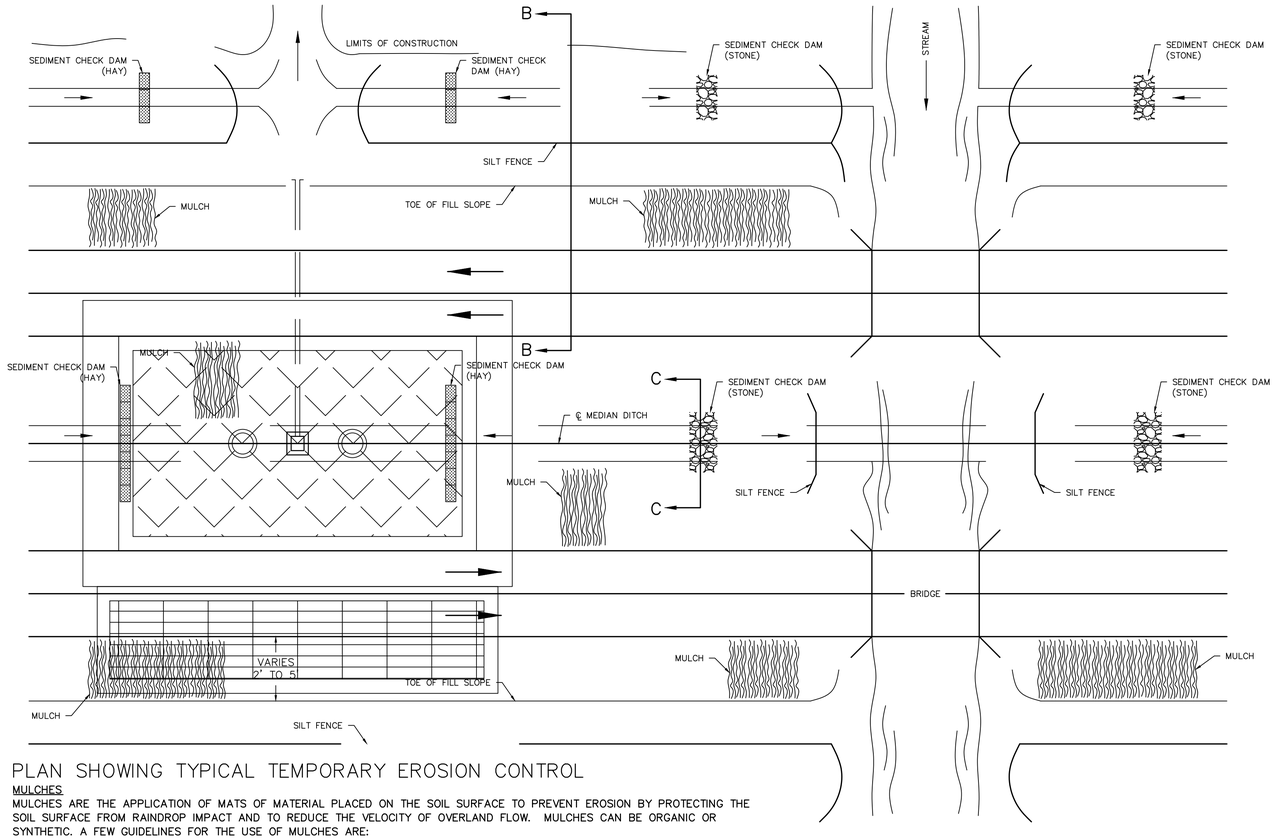

PLAN SHOWING TYPICAL TEMPORARY EROSION CONTROL

MULCHES:
MULCHES ARE THE APPLICATION OF MATS OF MATERIAL PLACED ON THE SOIL SURFACE TO PREVENT EROSION BY PROTECTING THE SOIL SURFACE FROM RAINDROP IMPACT AND TO REDUCE THE VELOCITY OF OVERLAND FLOW. MULCHES CAN BE ORGANIC OR SYNTHETIC. A FEW GUIDELINES FOR THE USE OF MULCHES ARE:

1. USE ON CUT AND EMBANKMENT SLOPES WHICH HAVE NOT BEEN COMPLETED TO PLAN GRADE OR WHERE THE WEATHER OR SOIL CONDITIONS WILL NOT PERMIT COMPLETING THEM WITHIN A REASONABLE TIME.;

2. USE ON CLEARED, GRUBBED AND SCALPED AREAS WHERE SOIL EROSION IS LIKELY TO OCCUR;

3. USE WITH TEMPORARY SEEDING.

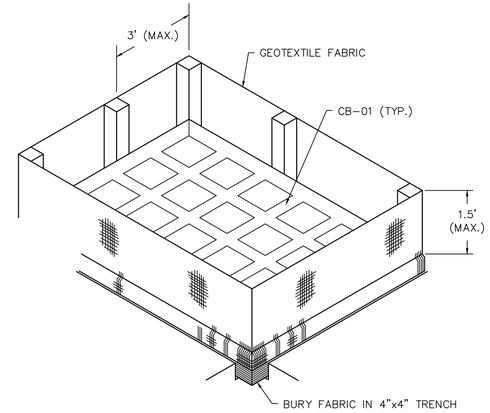

ISOMETRIC VIEW SHOWING GEOTEXTILE FABRIC
(BACKFILL SOIL NOT SHOWN)

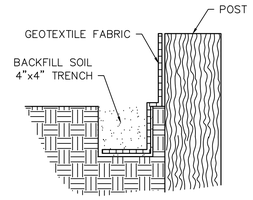

SECTION THRU TRENCH SHOWING GEOTEXTILE FABRIC

NOTES:
THE TEMPORARY DROP INLET SILT TRAP IS TO BE USED FOR SMALL DRAINAGE AREAS (LESS THAN 1 ACRE) WHERE THE STORM DRAIN IS FUNCTIONAL BEFORE THE AREA IS STABILIZED. THE TRAP CAN BE EITHER GEOTEXTILE FABRIC OR HAY BALES:

1. WOODEN STAKES SUPPORTING THE FABRIC SHALL BE 2"x2" OR 2"x4" WITH A MINIMUM LENGTH OF 3 FEET. THE STAKES SHALL BE SPACED AROUND THE INLET AT A MAXIMUM SPACING OF 3 FEET.

2. THE HEIGHT OF THE FABRIC ABOVE THE INLET SHALL BE LIMITED TO 1.5' AND THE BOTTOM OF THE FABRIC SHALL BE BURIED IN A TRENCH APPROXIMATELY 4" WIDE BY 4" DEEP. THE FABRIC SHALL BE STAPLED TO THE POST WITH ½" STAPLES.

4. THE TRAP SHOULD BE INSPECTED REGULARLY AND AFTER EACH STORM. THE SEDIMENT SHOULD BE REMOVED AND MAKE SURE EACH STAKE IS FIRMLY IN THE GROUND.

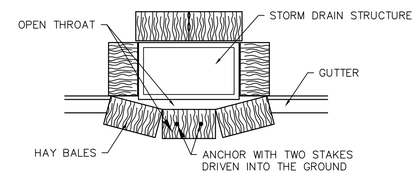

PLAN SHOWING HAY BALES

TEMPORARY INLET SILT TRAP

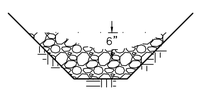

SECTION C–C

TEMPORARY SEDIMENT CHECK DAM (STONE)

NOTES:
A STONE CHECK DAM IS A SMALL TEMPORARY DAM CONSTRUCTED ACROSS A SWALE OR DRAINAGE DITCH. THE PURPOSE OF THIS MEASURE IS TO REDUCE THE VELOCITY OF CONCENTRATED STORMWATER FLOWS, THEREBY REDUCING EROSION OF THE SWALE OR DITCH. THE STONE CHECK DAM WILL TRAP SMALL AMOUNTS OF SEDIMENTS GENERATED IN THE DITCH ITSELF, HOWEVER IT SHOULD NOT BE USED AS A SEDIMENT TRAPPING DEVICE. A FEW BASIC DESIGN GUIDELINES FOR THE USE OF STONE CHECK DAMS ARE:

1. USE IN SMALL OPEN CHANNELS WHICH DRAIN 10 ACRES OR LESS;

2. DO NOT USE IN A LIVE STREAM;

3. USE IN A TEMPORARY DITCH OR SWALE WHICH, BECAUSE OF THEIR SHORT LENGTH OF SERVICE, CANNOT RECEIVE A NON–ERODIBLE LINING;

4. USE IN PERMANENT DITCHES OF SWALES WHICH WILL NOT RECEIVE A PERMANENT LINING FOR AN EXTENDED PERIOD OF TIME;

5. USE IN TEMPORARY OR PERMANENT DITCHES OR SWALES WHICH NEED PROTECTION DURING THE ESTABLISHMENT OF GRASS LININGS.

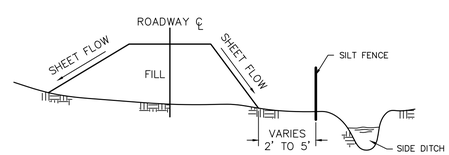

TEMPORARY SILT FENCE APPLICATION

FOR CONSTRUCTION DETAILS AND SPECIFICATIONS SEE CONSTRUCTION OF TEMPRARY SILT FENCING

ATTENTION CONTRACTOR

STORM WATER GENERAL PERMIT FOR CONSTRUCTION ACTIVITIES

AUTHORIZATION TO DISCHARGE UNDER THE LOUISIANA POLLUTANT DISCHARGE ELIMINATION SYSTEM

PURSUANT TO THE CLEAN WATER ACT, AS AMENDED (33 U.S.C. 1251 et. seq.), AND THE LOUISIANA ENVIRONMENTAL QUALITY ACT, AS AMENDED (LA. R. S. 30:2001, et. seq.), RULES AND REGULATIONS EFFECTIVE OR PROMULGATED UNDER THE AUTHORITY OF SAID ACTS.

THE DEVELOPER HAS OBTAINED THE REQUIRED DISCHARGE PERMIT FOR THE SUBJECT PROJECT SITE.

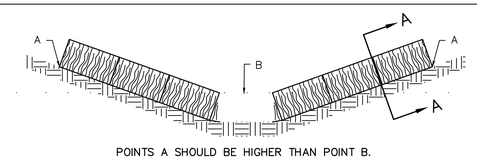

POINTS A SHOULD BE HIGHER THAN POINT B.

ELEVATION

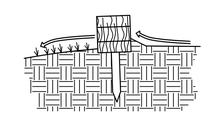

SECTION A–A

TEMPORARY SEDIMENT CHECK DAM (HAY)

NOTES:
A HAY BALE BARRIER IS A TEMPORARY SEDIMENT BARRIER CONSISTING OF A ROW OF ENTRENCHED AND ANCHORED BALES OF STRAW OR HAY. THE HAY BALE BARRIER IS ALSO USED AS A CHECK DAM TO REDUCE THE VELOCITY IN SMALL DITCHES OR SWALES. A FEW BASIC DESIGN GUIDELINES FOR THE USE OF A HAY BALE BARRIER ARE:

1. USE WHERE EROSION WOULD OCCUR IN THE FORM OF SHEET AND RILL EROSION;

2. USE IN MINOR SWALES OR DITCHES WHERE THE MAXIMUM DRAINAGE AREA IS 2 ACRES;

3. ONLY USE WHERE THE EFFECTIVENESS IS REQUIRED FOR LESS THAN 3 MONTHS;

4. DO NOT USE IN LIVE STREAMS OF THE SWALES OR DITCHES WHERE THERE IS A POSSIBILITY OF A WASHOUT.

STATE OF LOUISIANA
WILLIAM J. BODIN, JR.
REG. No. 8193
REGISTERED PROFESSIONAL ENGINEER IN CIVIL ENGINEERING

WILLIAM J. BODIN, JR. C.E., P.L.S.
LA. REG. NO. 8193 & 4253

08–02–18
DATE

#	DATE	REVISION	BY	#	DATE	REVISION	BY
1.	11–14–16	CHANGED STREET WIDTH FORM 11' TO 12'	W.J.B.				
2.	11–15–16	NOTE: TO INCLUDE E. PARK STREET	W.J.B.				
2.	06–01–17	REVISED TO CORRECT STREET WIDTHS AND DRAINAGE AREAS.	W.J.B.				

BODIN AND WEBB, INC.
CONSULTING ENGINEERS
1024 S. CYPRESS
HAMMOND, LOUISIANA 70403
PH# (985) 345–3947 FAX# (985) 345–0213

RED LLC.
202 EAST ROBERT
HAMMOND, LA. 70401
OWNER

DESIGNED: W.J.B.	DATE: 08–08–17	EROSION CONTROL DETAIL	PROJECT NO. 1633
DRAWN: CDB			SHEET NO. 12 OF 14
CHECKED: W.J.B.	SCALE: N.T.S.		
APPROVED: W.J.B.			

S:\CAD Jobs\JOBS BY YEAR\2015\15321\10-4-16\CYPRESS CROSSING 10-4-2016\cypress crossings temp recover 08-02-18.dwg, 8/2/2018 3:01:07 PM, AutoCAD PDF (General Documentation).pc3

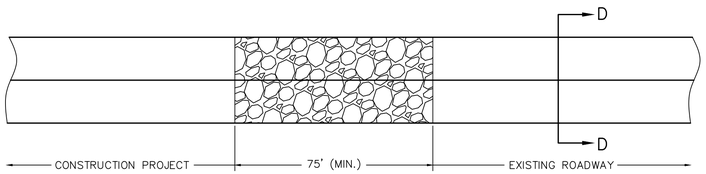

PLAN

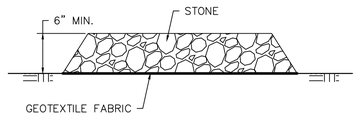

SECTION D–D

TEMPORARY STONE CONSTRUCTION ENTRANCE

NOTES:
A STONE STABILIZED PAD LOCATED AT POINTS OF VEHICULAR INGRESS AND EGRESS ON THE CONSTRUCTION SITE TO REDUCE THE AMOUNT OF MUD TRANSPORTED ONTO PUBLIC ROADS. IF THE ACTION OF THE VEHICLE TRANSPORTED ONTO PUBLIC ROADS. IF THE ACTION OF THE VEHICLE TRAVELING OVER THE GRAVEL PAD IS NOT SUFFICIENT TO REMOVE THE MAJORITY OF THE MUD, THEN THE TIRES MUST BE WASHED BEFORE THE VEHICLE ENTERS A PUBLIC ROAD. A FEW BASIC DESIGN GUIDELINES FOR THE USE OF STONE CONSTRUCTION ENTRANCE AND/OR WASH ROCKS ARE:

1. A STONE LAYER MUST BE AT LEAST 6 INCHES THICK;

2. THE LENGTH OF THE PAD MUST BE AT LEAST 75 FEET AND IT MUST EXTEND THE FULL WIDTH OF THE VEHICULAR INGRESS AND EGRESS;

3. A GEOTEXTILE UNDERLINER IS REQUIRED.

4. IF A WASH ROCK IS NECESSARY, PROVISIONS MUST BE MADE TO INTERCEPT THE WASH WATER AND TRAP THE SEDIMENT BEFORE IT IS CARRIED OFF–SITE.

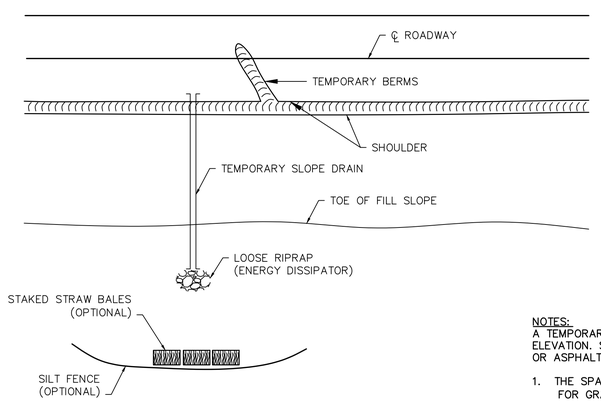

PLAN

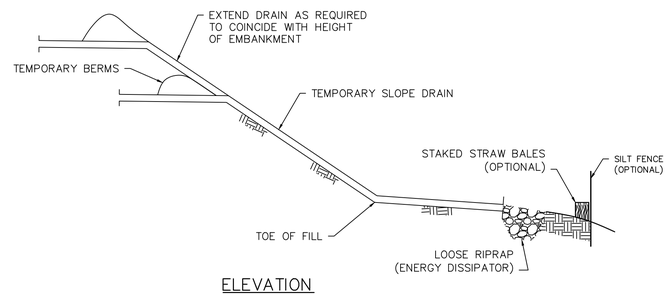

ELEVATION

TEMPORARY SLOPE DRAIN

NOTES:
A TEMPORARY SLOPE DRAIN IS A DEVICE USED TO CARRY WATER FROM THE CONSTRUCTION WORK AREA TO A LOWER ELEVATION. SLOPE DRAINS MAY BE PLASTIC SHEETS, METAL OR PLASTIC PIPE, STONE GUTTERS, FIBER MATS, OR CONCRETE OR ASPHALT DITCHES. A FEW BASIC GUIDELINES FOR THE USE OF A TEMPORARY SLOPE DRAIN ARE:

1. THE SPACING OF THE SOLE DRAINS VARIES WITH THE ROAD GRADE.
   FOR GRADES : 0.0% – 2.0% USE 500' SPACING
   2.1% – 5.0% USE 200' "
   GREATER THAN 5% USE 100' "

2. SLOPE DRAIN MATERIAL: SMOOTH PIPE – 8" MINIMUM
   CORRUGATED PIPE – 12" MINIMUM
   PLASTIC SHEETING – 4' WIDE MINIMUM
   " " – 3 MILS THICK MIN.

3. PLASTIC SHEETING CAN BE STAKED DOWN OR WEIGHTED WITH ROCKS OR LOGS. THE AREA UNDER THE SHEETING SHOULD BE SHAPED TO PROVIDE AN ADEQUATE CHANNEL.

4. THE OUTLET END SHOULD BE PROTECTED OR HAVE SOME MEANS OF DISSIPATING ENERGY. THE FLOW SHOULD BE DIRECTED THROUGH A SEDIMENT TRAP SUCH AS A SILT FENCE OF HAY BALES.

5. TO INSURE PROPER OPERATION, TEMPORARY SLOPE DRAINS SHOULD BE INSPECTED REGULARLY AND AFTER EACH STORM, FOR CLOGGING OR DISPLACEMENT. EROSION AT THE OUTLET SHOULD BE CHECKED AND THE SILT TRAPS CLEANED IS NECESSARY.

1. SET POSTS AND EXCAVATE A 4" x 4" TRENCH UPSLOPE ALONG THE LINE OF POSTS.

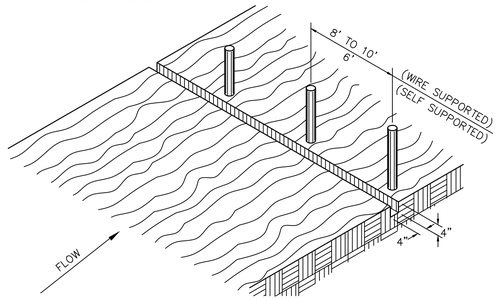

2. STAPLE WIRE FENCING TO THE POSTS.

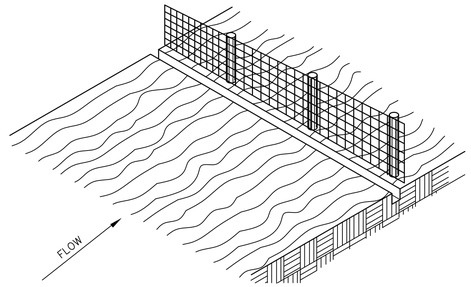

3. ATTACH THE FILTER FABRIC TO THE WIRE FENCE AND EXTEND IT INTO THE TRENCH.

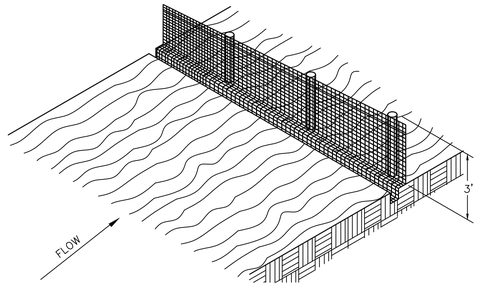

4. BACKFILL AND COMPACT EXCAVATED SOIL.

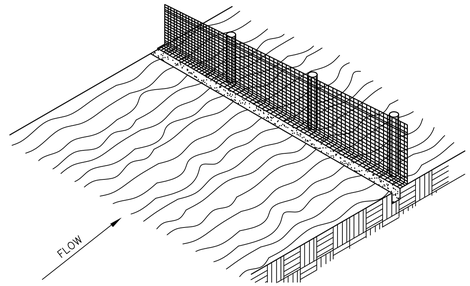

EXTENSION OF FABRIC INTO THE TRENCH

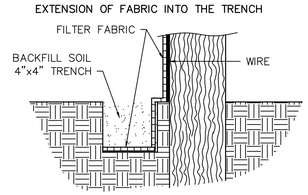

CONSTRUCTION OF TEMPORARY SILT FENCING

(WIRE SUPPORTED SILT FENCE IS SHOWN. SELF SUPPORTED SILT FENCE WILL BE CONSTRUCTED ACCORDING TO MANUFACTURERS SPECIFICATIONS.)

NOTES:
SILT FENCING IS A TEMPORARY SEDIMENT BARRIER CONSISTING OF A FILTER FABRIC SUPPORTED BY POST AND STRETCHED ACROSS AN AREA TO INTERCEPT AND DETAIN SMALL AMOUNTS OF SEDIMENT. A FEW BASIC GUIDELINES FOR THE USE OF SILT FENCING ARE:

1. USE WHERE EROSION WOULD OCCUR IN THE FORM OF SHEET AND RILL EROSION;

2. USE WHERE THE MAXIMUM DRAINAGE AREA BEHIND THE SILT FENCE IS $\frac{1}{4}$ ACRE PER 100 FEET OF SILT FENCE LENGTH;

3. USE WHERE THE MAXIMUM SLOPE LENGTH BEHIND THE BARRIER IS 100 FEET;

4. USE WHERE THE MAXIMUM GRADIENT BEHIND THE BARRIER 2:1;

5. DO NOT BLOCK THE SILT FENCES IN LIVE STREAMS OR IN DITCHES OR SWALES WHERE FLOWS EXCEED NE CUBIC FOOT PER SECOND.

STATE OF LOUISIANA
WILLIAM J. BODIN, JR.
REG. No. 8193
REGISTERED
PROFESSIONAL ENGINEER
IN
CIVIL ENGINEERING

Wm J Bodin Jr.
WILLIAM J. BODIN, JR. C.E., P.L.S.
LA. REG. NO. 8193 & 4253

08–02–18
DATE

#	DATE	REVISION	BY	#	DATE	REVISION	BY
1.	11–14–16	CHANGED STREET WIDTH FORM 11' TO 12'	W.J.B.				
2.	11–15–16	NOTE: TO INCLUDE E. PARK STREET	W.J.B.				
2.	06–01–17	REVISED TO CORRECT STREET WIDTHS AND DRAINAGE AREAS.	W.J.B.				

BODIN AND WEBB, INC.
CONSULTING ENGINEERS
1024 S. CYPRESS
HAMMOND, LOUISIANA 70403
PH# (985) 345–3947 FAX# (985) 345–0213

RED LLC.
202 EAST ROBERT
HAMMOND, LA. 70401
OWNER

DESIGNED: W.J.B.	DATE: 08–08–17	EROSION CONTROL DETAIL	PROJECT NO. 1633
DRAWN: CDB.			SHEET NO. 13 OF 14
CHECKED: W.J.B.	SCALE: N.T.S.		
APPROVED: W.J.B.			

S:\CAD Jobs\JOBS BY YEAR\2015\15321\10-4-16\CYPRESS CROSSING 10-4-2016\cypress crossings temp recover 08-02-18.dwg, 8/2/2018 3:01:41 PM, AutoCAD PDF (General Documentation).pc3

GENERAL NOTES

1. ALL WORK MUST CONFORM TO THE REQUIRIMENTS OF THE CITY OF HAMMOND, TANGIPAHOA PARISH, AND LA DOTD STANDARD SPECIFICATIONS FOR ROADS AND BRIDGES (LATEST EDITION) (LSSRB) AND ALL OTHER AGENCIES AS APPLICABLE.

2. THE LOCATIONS OF EXISTING UTILITIES SHOWN ON THE PLANS ARE APPROXIMATE. THE CONTRACTOR SHALL CAREFULLY VERIFY SAME AND TAKE THE NECESSARY PRECAUTIONS TO AVOID DAMAGE TO EXISTING UTILITIES.

3. DAMAGES TO EXISTING STREETS, DRAINAGE, OTHER UTILITY STRUCTURES, AND RESIDENT PROPERTIES SHALL BE REPAIRED AT THE EXPENSE OF THE CONTRACTOR TO ORIGINAL AND/OR BETTER CONDITIONS TO THE SATISFACTION OF THE OWNERS.

4. CONTRACTOR SHALL NOT DAMAGE TREES TO REMAIN IF DAMAGED, CONTRACTOR SHALL REPLACE AT HIS OWN COST. THE CONTRACTOR SHALL PROVIDE A LOUISIANA LICENSED ARBORIST TO PERFORM NECESSARY TREE TRIMMING, ROOT PRUNING, OR RECOMMENDATION OF REMOVAL OF ANY TREE GREATER THAN 12" CALIPER PRIOR TO BEGINNING EXCAVATION. CONTRACTOR SHALL USE A CHAIN SAW TO CUT ROOTS AND TREES EXPOSED DURING EXCAVATION AND COORDINATE WITH OWNER. CONTRACTOR SHALL NOT BREAK ROOTS BY PULLING THEM WITH DIGGING MACHINES. ROOTS AND BRANCH PROTECTANT SHALL BE SPRAYED OR PAINTED ON BRANCHES OR ROOTS WHICH HAVE BEEN CUT.

5. PROTECT ALL EXISTING TREES, PLANTING AND LAWNS FROM DAMAGE. ALL STREET SIGNS, FENCES, SHRUBBERY, ETC. RELOCATED DURING CONSTRUCTION SHALL BE RETURNED TO THEIR ORIGINAL LOCATION AND IN ORIGINAL CONDITIONS UNLESS OTHERWISE DIRECTED BY THE ENGINEER. STATE AND PARISH RIGHTS-OF-WAY AND ALL SERVITUDES SHALL BE CLEARED OF ALL TREES AND OBSTRUCTIONS.

6. CONTRACTOR SHALL BE RESPONSIBLE FOR DESIGN SERVICES, SUPPLYING MATERIALS, AND LABOR NECESSARY TO PROVIDE SHEETING, SHORING, AND BRACING OR SUPPORTS AS REQUIRED TO PROVIDE SAFE WORKING CONDITIONS FOR CONTRACTOR'S PERSONNEL AND TO PROVIDE FOR PROTECTION OF UTILITIES, BUILDINGS, LEVEES, AND STRUCTURES. IT SHALL BE THE SOLE RESPONSIBILITY OF THE CONTRACTOR TO COMPLY WITH THESE REQUIREMENTS. THE CONTRACTOR SHALL PROVIDE AN ADEQUATE SYSTEM TO WITHSTAND LATERAL PRESSURE. SHEET DESIGN AND INSTALLATION SHALL BE INCLUDED IN THE COST OF THE PIPE OR STRUCTURAL INSTALLATION.

7. CONTRACTOR SHALL RE-GRADE ALL AREAS AFFECTED BY CONSTRUCTION TO PROVIDE POSITIVE DRAINAGE. WORK SHALL BE IN A WORKMAN LIKE MANNER AND IN ACCORDANCE WITH A/E REQUIREMENTS. IF CONTRACTOR DETERMINES THAT ANY AREAS AFFECTED BY CONSTRUCTION CANNOT BE RE-GRADED TO DRAIN, CONTRACTOR SHALL DOCUMENT (I.E., TAKE ELEVATIONS, PICTURES, ETC.) EXISTING CONDITIONS PRIOR TO CONSTRUCTION.

8. ALL DRIVEWAYS DISRUPTED BY EXCAVATION SHALL BE RESTORED USING LIKE MATERIAL TO ORIGINAL OR BETTER CONDITION.

9. CONTRACTOR SHALL GIVE THOSE AFFECTED BY CONSTRUCTION 24 HOURS NOTICE PRIOR TO DISRUPTION OF DRIVEWAYS. DRIVEWAYS AND STREETS SHALL NOT REMAIN CLOSED OVERNIGHT.

10. CONTRACTOR SHALL NOTIFY THOSE AFFECTED BY CONSTRUCTION 24 HOURS PRIOR TO DISRUPTION OF WATER, SEWER AND OTHER UTILITY SERVICE. UTILITY SERVICES SHALL BE PROMPTLY REPAIRED AND NOT REMAIN OUT OF SERVICE OVERNIGHT.

11. CONTRACTOR SHALL AT ALL TIMES CONDUCT HIS OPERATIONS AS TO ENSURE THE LEAST INCONVENIENCE TO THE GENERAL PUBLIC AND ADJACENT PROPERTY OWNERS.

A. CONTRACTOR SHALL PROVIDE ACCESS TO COMMERCIAL/INDUSTRIAL PROPERTIES AT ALL TIMES.

B. CONTRACTOR SHALL PROVIDE ACCESS TO RESIDENTIAL PROPERTIES AT ALL TIMES. VEHICULAR ACCESS SHALL BE PROVIDED AS DIRECTED BY ENGINEER. UPON APPROVAL BY ENGINEER, VEHICULAR ACCESS MAY BE LIMITED DURING PAVING OF DRIVEWAYS. CONTRACTOR SHALL CONTACT AND ADVISE ALL AFFECTED PROPERTY OWNERS.

12. CONTRACTOR SHALL COORDINATE AND PAY FOR THE DE-ENERGIZING AND RE-ENERGIZING OF POWER LINES FOR CONSTRUCTION PURPOSES AS REQUIRED BY LOCAL, STATE AND FEDERAL AGENCIES.

13. CONTRACTOR SHALL BRACE UTILITY POLES ADJACENT TO EXCAVATION. BRACING SHALL REMAIN IN PLACE AFTER BACKFILLING UNTIL COMPACTION STANDARDS HAVE BEEN MET. COMPLETE WORK PROMPTLY ONCE EXCAVATION HAS BEGUN ADJACENT TO POLES.

14. IT IS THE CONTRACTOR'S RESPONSIBILITY TO COORDINATE DIRECTLY WITH THE APPROPRIATE UTILITY COMPANIES TO HAVE THE UTILITIES RELOCATED.

15. BACKFILL ALL UTILITY CROSSINGS, EXCAVATION UNDER THE ROADWAY AND SHOULDER WITH GRANULAR MATERIAL.

16. PRIOR TO PRE-CONSTRUCTION MEETING THE CONTRACTOR SHALL VERIFY EXISTING ELEVATIONS AND TIE-INS. IF DISCREPANCIES ARE FOUND, NOTIFY CIVIL ENGINEER IMMEDIATELY TO DETERMINE ANY REQUIRED ADJUSTMENTS.

17. ALL ELEVATIONS REFER TO OWNER-PROVIDED SURVEY.

18. ALL AREAS DISTURBED BY CONSTRUCTION SHALL BE HYDRO-SEEDED UNLESS RECEIVING NEW LANDSCAPING.

PAVEMENT NOTES

1. IN AREAS TO RECEIVE PAVEMENT, THE SUBGRADE SHALL BE EXCAVATED AND HAULED OFF TO A DEPTH NECESSARY TO REMOVE NON-STRUCTURAL FILL, ROOTS, ORGANICS AND OTHER DELETERIOUS MATERIALS. ALL EXCAVATION AND BACKFILL FOR PAVEMENT WORK SHALL EXTEND AT LEAST ONE (1) FOOT BEHIND FOOTPRINT OF PAVEMENT. THE AREA SHALL THEN BE PROOF ROLLED TO IDENTIFY AND WEAK SPOTS PRIOR TO PLACING BASE COURSE. PROOF ROLLING SHALL OCCUR WITHIN 48 HOURS OF THE PLACEMENT OF FILL OVER EXISTING SUBGRADE.

2. ALL SUBGRADE MATERIAL WHICH WILL NOT SATISFACTORILY COMPACT SHALL BE REMOVED AND REPLACED WITH STRUCURAL FILL THAT WILL COMPACT SATISFACTORILY. TOP 12 INCHES SHALL BE COMPACTED TO 95% STANDARD PROCTOR. WHERE THE SUBGRADE IS OF NON-UNIFORM COMPACTED NATURE, IT SHALL BE SCARIFIED TO A DEPTH OF AT LEAST 6 INCHES FOR ITS FULL WIDTH AND THE MATERIAL SPREAD AND BROUGHT TO LINE AND GRADE AND COMPACTED AS SPECIFIED ABOVE.

3. BASE COURSE FOR CONCRETE PAVEMENT SHALL CONSIST OF 12 INCHES (MIN.) OF SELECT SAND FILL BEING NON-PLASTIC AND FREE OF ROOTS, CLAY LUMPS AND OTHER DELETERIOUS MATERIALS WITH NO MORE THAN 10% BY WEIGHT OF MATERIAL PASSING THE NO. 200 SIEVE (AASHTO A-3 OR BETTER). BASE COURSE FOR CONCRETE SIDEWALKS SHALL BE 6 INCHES THICK (MIN.) OF SAME SELECT SAND FILL.

4. BASE COURSE SHALL BE PLACED IN LOOSE LIFTS NO GREATER THAN 6 INCHES IN THICKNESS AND COMPACTED TO 95% OF ITS MAX. DRY DENSITY NEAR ±2% OPTIMUM MOISTURE CONTENT ACCORDING TO ASTM D 698.

5. PORTLAND CEMENT CONCRETE PAVEMENT SHALL BE IN ACCORDANCE WITH SECTION 901 OF THE LSSRB FOR TYPE B CONCRETE AND SHALL ATTAIN A MINIMUM COMPRESSIVE STRENGTH OF 4000 PSI FOR 28 DAYS. CONCRETE FOR SIDEWALKS SHALL ATTAIN A MINIMUM COMPRESSIVE STRENGTH OF 3000 PSI FOR 28 DAYS.

6. CONCRETE PAVEMENT FOR PARKING AND DRIVES SHALL HAVE A MEDIUM-TO-FINE TEXTURED BROOM TYPE FINISH. CONCRETE SIDEWALKS SHALL HAVE A LIGHT BROOM-TEXTURED FINISH.

7. ASPHALTIC CONCRETE PAVEMENT ITEMS 1 AND 2 ABOVE SHALL APPLY FOR SUBGRADES FOR ASPHALTIC PAVEMENTS.

8. ASPHALT CONCRETE SHALL BE IN ACCORDANCE WITH LOUISIANA STANDARDS SPECIFICATIONS FOR ROADS AND BRIDGES, SPECIFICALLY DOTD'S TYPE 2 WEARING COURSE.

9. JOINT LAYOUT SHOWN ON DRAWINGS IS SUGGESTED. ALL JOINTS ARE TO BE USED WHERE SHOWN ON THE DRAWINGS OR AS DIRECTED BY THE ENGINEER. CONCRETE PANELS SHALL NOT EXCEED TWELVE (12) FEET IN ANY DIRECTION AS SHOWN ON THE PLANS.

10. PAVEMENT SHALL BE NOT OPENED TO TRAFFIC AFTER PLACEMENT UNTIL DESIGN STRENGTH IS MET WITHOUT THE APPROVAL OF THE ENGINEER.

11. ALL DRAINGE AND SEWER STRUCTURES WITHIN THE PAVEMENT AREA SHALL BE BOXED OUT WITH EXPANSION JOINTS.

12. NO CONCRETE SHALL BE POURED WITHOUT THE SERVICES OF THE TESTING LAB TECHNICIAN TO WITNESS THE POUR, MAKE SLUMP TESTS AND MAKE TEST CYLINDERS.

13. IMMEDIATELY AFTER COMPLETION OF FINISHING OPERATIONS AND AS SOON AS MARRING OF CONCRETE WILL NOT OCCUR, THE PAVEMENT SURFACE SHALL BE CURED BY COVERING WITH A WHITE PIGMENTED CURING COMPOUND IN CONFORMANCE WITH DOTD STANDARD SPECIFICATIONS FOR ROADS AND BRIDGES LATEST EDITION.

14. JOINT SEALER SHALL BE IN ACCORDANCE WITH SECTION 115.02 OF DOTD STANDARD SPECIFICATIONSS FOR ROADS AND BRIDGES (LATEST EDITION). THE SEALANT AND BACKER MATERIALS SHALL BE APPROVED PRODUCTS LISTED IN DOTD'S QUALIFIED PRODUCT LIST 67.

15. JOINTS ENDING AT CURVES SHALL BE CARRIED ONTO THE CURB AND PAVEMENT AT RIGHT ANGLES TO THE TANGENT AT THAT POINT.

16. AN APPROVED TESTING LABORATORY, SELECTED BY THE OWNER, SHALL BE RETAINED BY THE CONTRACTOR AND SHALL PROVIDE ALL REQUIRED TESTING. TEST REPORTS MUST BE FURNISHED TO THE ENGINEER AND CONTRACTOR.

17. CONTRACTOR SHALL PROVIDE MEANS FOR TEMPORARY DRAINAGE DURING CONTRUCTION.

18. CONTRACTOR SHALL INSTALL CONCRETE SIDEWALK AT GRADES SHOWN AND SHALL COMPLY WITH ALL APPLICABLE ADA STANDARDS.

19. CONTRACTOR SHALL ADJUST GRADE BREAK LOCATIONS OF SIDEWALKS TO COINCIDE WITH NECESSARY JOINT SPACING AS LONG AS ADA REQUIREMENTS ARE MET.

20. CONTRACTOR SHALL BACKFILL AND GRADE BEHIND CONCRETE SIDEWALKS TO ALLOW FOR POSITIVE DRAINAGE AWAY FROM ALL BUILDINGS.

REQUIRED TESTING SERVICES

THE FOLLOWING TESTING SERVICES SHALL BE PERFORMED BY AN INDEPENDENT TESTING COMPANY AS SELECTED BY THE ENGINEER/OWNER TO ENSURE CONFORMANCE WITH THE PLANS AND SPECIFICATIONS. ALL FEES ASSOCIATED WITH REQUIRED TESTING SHALL BE PAID FOR DIRECTLY BY THE CONTRACTOR.

1. BASE COURSE/STRUCTURAL FILL:

A. PICK-UP OF SAMPLES OF PROPOSED BASE COURSE MATERIALS, INCLUDING BEDDING AND BACKFILL MATERIAL FOR DRAINAGE PIPE AND STRUCTURES.
B. IN-LAB GRADATION AND PROCTOR TESTING OF SAMPLES FOR CONFORMANCE WITH SPECIFICATIONS.
C. IN-FIELD NUCLEAR DENSITY TESTING OF FILL (MIN. 4 TESTS PER 200 SQ. YDS. PER LIFT OF SECTION TO BE POURED).
D. IN-FIELD NUCLEAR DENSITY TESTING OF DRAINAGE PIPE/STRUCTURE BEDDING AND BACKFILL (MIN. 1 TEST PER 250 LINEAR FEET PER LIFT OF EACH MATERIAL).

2. CONCRETE PAVEMENT:

A. REVIEW OF ALL CONCRETE MIX DESIGNS PROPOSED FOR USE ON PROJECT.
B. OBTAINING AND TESTING ONE (1) SET OF CYLINDERS (4 PER SET) FOR EACH 50 CU. YDS. OR PORTION THEREOF PER DAY. ONE (1) CYLINDER SHALL BE BROKEN AT SEVEN (7) DAYS AND THE OTHER TWO (2) SHALL BE BROKEN AT TWENTY-EIGHT (28) DAYS. ONE (1) CYLINDER SHALL BE KEPT IN RESERVE.

3. ANY OTHER TESTS SPECIFIED ON DRAWINGS OR SPECIFICATIONS AND AS DIRECTED BY ENGINEER TO ENSURE CONFORMANCE WITH PLANS AND SPECIFICATIONS.

SEWER AND WATER NOTES

1. GRAVITY SEWER PIPE SHALL BE POLYVINYL CHLORIDE GASKET JOINT CONFORMING TO ASTM D3034 SDR 35. RUBBER GASKETS SHALL BE ASTM D1869.

2. WATERLINES 3 INCH DIA. AND SMALLER SHALL BE PVC CLASS 200 MEETING ASTM D2241 SPECIFICATION WITH BELL AND SPIGOT RUBBERT GASKET JOINTS. FITTINGS SHALL BE PVC COMPATIBLE WITH PIPE.

3. PVC WATERLINES > 3" SHALL BE POLYVINYL CHLORIDE GASKET JOINT CLASS 160 (SDR 26) TYPE 1, GRADE 1, ASTM D2241, WITH "FLUID TIGHT" COUPLINGS CONFORMING TO ASTM D1784. RUBBER GASKETS SHALL BE ASTM D1869. PE WATERLINES SHALL BE IN ACCORDANCE WITH AWWA, C906, AND DR11.

4. CONCRETE THRUST BLOCKS SHALL BE INSTALLED AT ALL FITTINGS, BENDS, TEES AND DEAD ENDS ON ALL WATERLINES.

5. CONTRACTOR SHALL USE TRANSITIONAL COUPLING FOR PE TO PVC CONNECTIONS.

6. PARALLEL WATERLINES AND SEWERS (INCLUDING GRAVITY AND FORCE MAINS) SHALL BE LAID IN SEPARATE TRENCHES NOT LESS THAN 10 FEET APART HORIZONTALLY. CROSSING WATER AND SEWER LINES SHALL HAVE A MINIMUM VERTICAL SEPARATION OF 18 INCHES. THE WATER LINE SHALL BE LAID HIGHER IN ELEVATION THAN THE SEWER LINE.

7. CONTRACTOR SHALL INSTALL RESTRAINED JOINT PIPE (20' MIN.) ON EACH SIDE OF ALL FITTINGS FOR WATERLINE.

8. BURIED VALVES, INCLUDING 2 INCH VALVES, SHALL HAVE A THREE PIECE CAST IRON VALVE BOX INSTALLED AND ADJUSTED TO FINISHED GRADE. BURIED VALVES SHALL HAVE AN AWWA OPERATING NUT AND A BOX COVER LABELED "WATER". EACH VALVE BOX SHALL HAVE A 24 INCH SQUARE OR 24 INCH ROUND BY 4 INCH THICK CONCRETE PAD, EITHER CAST IN PLACE OR PREFABRICATED AND ADJUSTED TO FINISHED GRADE.

9. WATER LINES SHALL BE DISINFECTED IN ACCORDANCE WITH LAC 51:XII.353.A. AND APPROVED BY THE LOUISIANA DEPARTMENT OF HEALTH AND HOSPITALS BEFORE BEING PLACED INTO SERVICE.

10. BRASS FITTINGS SHALL BE MUELLER.

11. BLUE IDENTIFICATION TAPE AND TRACER WIRE SHALL BE USED ON ALL BURIED SERVICE WATERLINES PROVIDING POTABLE WATER. RED IDENTIFICATION TAPE AND TRACER WIRE SHALL BE USED ON ALL BURIED FIRE PROTECTION WATERLINE. IN ADDITION, ALL FIRE PROTECTION WATERLINE ABOVE GROUND SHALL BE PAINTED RED TO DISTINGUISH IT FROM POTABLE WATERLINE.

12. CONTRACTOR SHALL COORDINATE ALL UTILITY TIE-INS WITH THE CITY OF HAMMOND WATER AND SEWER DEPARTMENT.

STATE OF LOUISIANA
WILLIAM J. BODIN, JR.
REG. No. 8193
REGISTERED
PROFESSIONAL ENGINEER
IN
CIVIL ENGINEERING

WILLIAM J. BODIN, JR. C.E., P.L.S.
LA. REG. NO. 8193 & 4253

08-02-18
DATE

#	DATE	REVISION	BY	#	DATE	REVISION	BY
1.	11-14-16	CHANGED STREET WIDTH FORM 11' TO 12'	W.J.B.				
2.	11-15-16	NOTE: TO INCLUDE E. PARK STREET	W.J.B.				
2.	06-01-17	REVISED TO CORRECT STREET WIDTHS AND DRAINAGE AREAS.	W.J.B.				

BODIN AND WEBB, INC.
CONSULTING ENGINEERS
1024 S. CYPRESS
HAMMOND, LOUISIANA 70403
PH# (985) 345-3947 FAX# (985) 345-0213

RED LLC.
202 EAST ROBERT
HAMMOND, LA. 70401
OWNER

DESIGNED: W.J.B.	DATE: 08-08-17	
DRAWN: CDB		
CHECKED: W.J.B.	SCALE: 1"=30'	
APPROVED: W.J.B.		

GENERAL NOTES
HAMMOND, LA

PROJECT NO. 1633
SHEET NO. 14 OF 14

S:\CAD Jobs\JOBS BY YEAR\2015\15321\10-4-16\CYPRESS CROSSING 10-4-2016\cypress crossings temp recover 08-02-18.dwg, 8/2/2018 3:02:29 PM, AutoCAD PDF (General Documentation).pc3

Spangler Engineering, LLC

CONSULTING CIVIL ENGINEERS

T. C. Spangler, Jr., P.E.
Webb M. Anderson, P.E.
Jay C. Pittman, P.E.

November 14, 2016

Ms. Tracie Schillace, City Building/Planning Department
City of Hammond
P. O. Box 2788
Hammond, Louisiana 70404

RE: Subdivision Review
Cypress Crossings Subdivision [15 lots]
S. Cypress Street

Dear Tracie:

We reviewed the plan sheets for referenced subdivision prepared by Bodin & Webb, Inc. (dated "11-10-2016"), and offer the following comments.

General

No exceptions taken.

Streets

Assuming East Park Street is to be extended to the development, a typical street section should be shown and a note should be added indicating that it is to be built as a part of this development.

The Typical Curb and Gutter Street Section width ("26 ft" shown on sheet "5") and the back to back curb dimension called out on sheet "3" ("28 ft") are not consistent.

Drainage

A Drainage Impact Study indicating "no net runoff" has not been submitted.

Sewer & Water

No exceptions taken.

If there are any comments or questions, please contact me.

Sincerely,

T. C. Spangler, Jr., P.E.

cc: Mayor Pete Panepinto
Mr. Bill Bodin, P.E., P.L.S.

214 Southwest Railroad Avenue • Post Office Box 1374 • Hammond, Louisiana 70404 • (985) 542-8665

SUBDIVISION APPROVAL & LAND DEVELOPMENT APPLICATION
CITY OF HAMMOND
219 E. ROBERT ST., HAMMOND, LA 70401 / PHONE: (985) 277-5649 – FAX (985) 277-5638

FILING DATE: ______ **PERMIT#** SUB-2018-07-00086

The next Planning Commission Meeting will be held on Aug 2, 2018 **, at 5:00pm in the City Council Chambers, 312 E. Charles Street. Application to be submitted to Planning Department according to the deadline schedule.**

This Application for: ☐ **Minor Subdivision** ☐ **Administrative Subdivision** ☒ **Major Subdivision**

0HMD000000698, 700, 693, 692, 694, 699, 691, 695

PARCEL # _____ **(Please verify address w/City of Hammond GIS Dept.)**

SITE LOCATION OR LEGAL DESCRIPTION: _____

Where did you get this address? ☐*Post Office* ☐*City Building Dept.* ☐*911 Office* ☐*Other* _____

List all current property owners:

PROPERTY OWNER: RED LLC PHONE(985 974-5891

ADDRESS: 200 E. ROBERT ST. HAMMOND, LA 70401
Street or PO Box City State Zip

(List additional PARCEL ADDRESS & PROPERTY OWNER information on reverse side of application.)

APPLICANT/DEVELOPER: SAME
First Name MI Last Name

COMPANY NAME: _____ ☐Owner ☐Contractor ☐Other

Applicant Mailing Address: _____
Street or PO Box City State Zip

Applicant Telephone: (_____)_____ Applicant Fax: (_____)_____

PERMIT INFO-Additional Check if you will be applying for: ☐ANNEXATION ☐REZONING ☐VARIANCE

# of Acres: _____ # of Proposed Lots: 17

NAME OF DEVELOPMENT: CYPRESS CROSSING

EXISTING ZONING: **MX-N MX-C MX-CBD C-N C-H C-R I-H I I-L RS-3 RS-5 RM-2 RS-8 RS-11 RM-3 RP RS-11.A S-1 S-2 SC**

CURRENT USE OF LAND: _____

INTENDED USE OF LAND:
[ ]Single Family Residential [ ]Condominium/Townhouse [X]Multi-Family [ ]Commercial
[ ]Industrial [ ]Other (explain)_____

DESIGN ENGINEER/ARCHITECT WM J. BODIN JR. PHONE (_____)_____

Will [ ] PROCEDURE "A" (with bond) OR [X] PROCEDURE "B" (without bond) BE USED?

ATTENTION: APPLICANT

NOTE: Six (6) copies of the complete plans and specifications and seven (7) additional copies of any property plat containing information pertaining to the attached check list shall be made part and submitted with the application for preliminary review.

ALL INFORMATION ON THIS APPLICATION MUST BE COMPLETE AND ALL FEES PAID BEFORE THIS APPLICATION WILL BE ACCEPTED ON THE AGENDA FOR THE CITY OF HAMMOND PLANNING & ZONING COMMISSION.

x Ross [signature] July 18, 2018
APPLICANT SIGNATURE DATE

x_____ _____
OWNER SIGNATURE DATE

x_____ _____
CITY PLANNER DATE

********** **OFFICIAL USE** **********

Fees for **Preliminary and Final Review**: $ 300.00 + $5.00 for Each Lot or Building = TOTAL DUE $ 385.00
[Fees for Minor Subd. **Review**:] $50.00 + $2.00 for each lot or building = TOTAL DUE $_____

****

AMOUNT PAID: $ 385.00 **CHECK#** 1645 **PAID CASH** ☐ **DATE PAID** 7/18/18

AMOUNT PAID: $_____ **CHECK#**_____ **PAID CASH** ☐ **DATE PAID**__/__/__

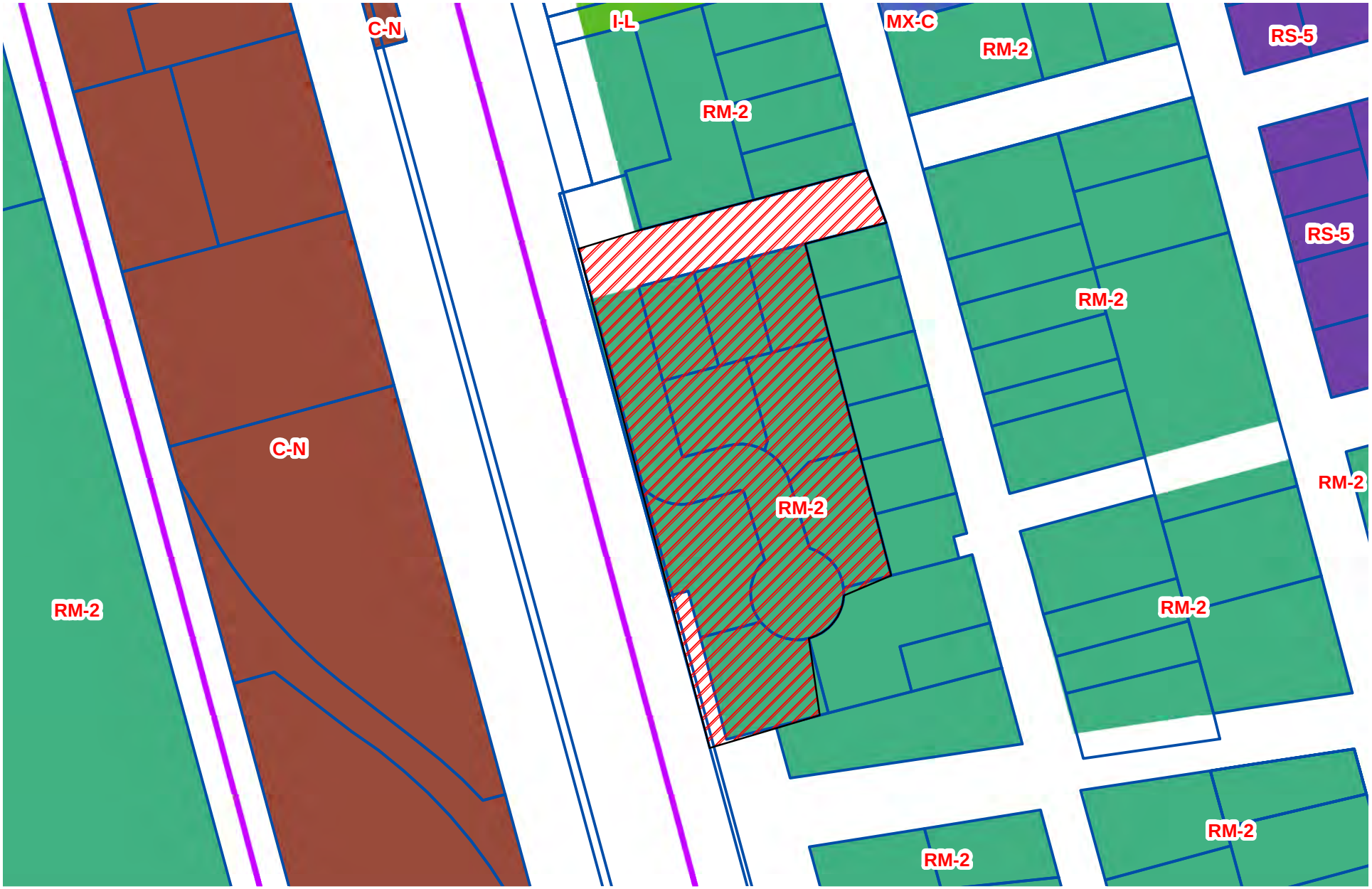

Major Subdivision
SUB-2018-07-00086
520 S. Cypress St.

Legend

Case parcel

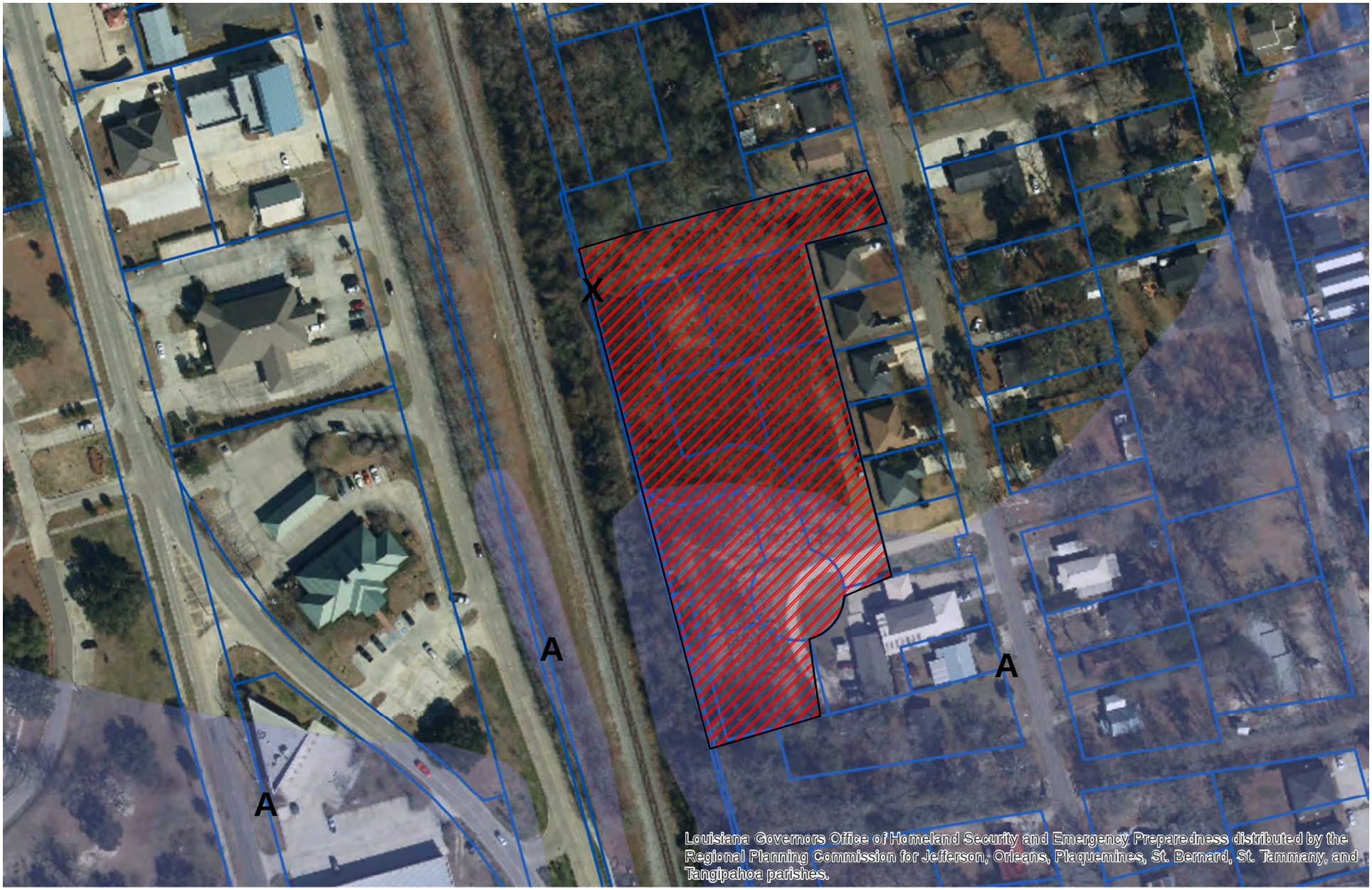

Major Subdivision
SUB-2018-07-00086
520 S. Cypress St.

Legend

Case parcel